Operating and Installation Instructions

GRANUDOS-VARIO dosing unit

without control unit, for:

GRANUDOS-VARIO-CPR Touch XL



Operating instructions for the CPR Touch XL measuring and control unit:
No. BA MR 001

GRANUDOS VARIO-Touch



Operating instructions for the GRANUDOS Touch control unit:
No. BA SW 010

GRANUDOS VARIO-S5



Operating instructions for the GRANUDOS S5 control unit:
No. BA SW 014

Table of contents

1 About these instructions / general 4
1.1 Scope of applicability 4
1.2 Target group 4
1.3 Symbols used 4
1.4 Warranty 5
1.5 Additional information 6
2 Safety 7
2.1 Intended use 7
2.2 Safety notices 7
2.2.1 Handling of chemicals, risks to humans and the environment 7
2.2.2 Protective measures and rules of conduct 8
3 Product description – scope of delivery 9
3.1 Scope of delivery / accessories 9
3.2 Product description 9
3.2.1 Functioning of GRANUDOS-VARIO, dosing unit 9
3.2.2 Upright column with drum holder (standard) 12
3.2.3 Chlorine dosing (standard) 13
3.2.4 Dissolving unit (standard) 14
3.2.5 Acid dosing (standard) 16
3.2.6 Buffer tank with/without collecting tub (only for **CPR Touch XL** and **Touch**) (option) 17
3.2.7 GRANUDOS control unit (standard) 17
3.2.8 Dust extraction (option) 18
3.3 Identification of the device / Identification plate 19
3.4 Technical data 20
3.4.1 Requirements for the calcium hypochlorite granulate 22
3.5 Transport/storage 22
4 Installation 23
4.1 Selecting the installation site 23
4.2 Installation instructions / installation suggestion 23
4.2.1 Suggested installation 24
4.3 Mechanical installation 25
4.3.1 Installation of the GRANUDOS-VARIO dosing device 25
4.3.2 Installation of the buffer tank (option) with / without collecting tub 25
4.4 Hydraulic installation 25
4.4.1 Installation of the dissolving and measuring water supply 28
4.4.2 Installation of the dosing line 30
4.4.3 Installation of the overflow line for the flushing tub 31
4.4.4 Connecting the buffer tank (option) 31
4.5 Electrical installation 31
4.5.1 Opening and closing the housing, GRANUDOS **CRP Touch XL** and GRANUDOS **Touch** 32
4.5.2 Opening and closing the housing, GRANUDOS **S5** 33
5 Commissioning 34
5.1 Commissioning - Remarks 34
5.2 Commissioning 34
5.2.1 Installation of peristaltic pump, roller carrier 34
5.2.2 Preparing acid dosing for operation 35
5.2.3 Attaching/changing the drum 36
5.2.4 Venting the booster pump and the piping to the GRANUDOS-VARIO 40
5.2.5 Venting the dust extraction pump (option) 41
5.2.6 Setting the water flow in the dissolving unit 41
5.2.7 Setting the water level in the flushing tub 43
6 Operation / Use 44
6.1 General 44
6.2 Replenishing consumables 44
7 Maintenance, care, fault 45
7.1 Device maintenance 45
7.1.1 Cleaning the dirt filter 45
7.1.2 Replacing the dosing screw and the dust gasket 45
7.1.3 Injector with flow switch 48
7.1.4 Maintenance and setting of the float control valve for the flushing tub inlet 49

7.1.5 Replacing and setting the Chlorine empty switch at the dosing hopper 49
7.1.6 Replacing the dosing pump's dosing hose 50
7.1.7 Justage of the "No chlorine switch" on the dissolving cyclone (only for version with buffer tank) 50
7.1.8 Cleaning the dust extraction (option) 51
7.2 Fault removal 52
8 Decommissioning – Storage – Disposal 53
8.1 General 53
8.2 Decommissioning of the GRANUDOS-VARIO dosing device 53
8.3 Buffer tank (option) 53
8.4 Disposal of used parts and operating materials 53
9 Documents 54
9.1 Declaration of conformity 54
9.2 Wiring diagrams 55
9.3 Commissioning protocol 55
9.4 Operation data sheet 55
9.5 Maintenance protocol 56
9.6 Spare parts list, wear parts list, consumables 56
10 Appendices 58

Imprint:
All rights reserved
© Copyright by WDT – Werner Dosiertechnik GmbH & Co KG
Edition: see footer
Reproduction of any kind and translation into other languages, even in excerpts, is only permitted with the express authorisation of the company WDT - Werner Dosiertechnik GmbH & Co. KG.
Subject to technical modifications
These operating instructions are an English translation of the original German version by the company WDT.

Responsible for the content:
Co. WDT - Werner Dosiertechnik GmbH & Co. KG
Hettlinger Str. 17
D-86637 Wertingen - Geratshofen
Phone: +49 (0) 82 72 / 9 86 97 – 0
Fax: +49 (0) 82 72 / 9 86 97 – 19
Email: info@werner-dosiertechnik.de

1 About these instructions / general

1.1 Scope of applicability

These instructions describe the function, installation, commissioning and operation of the GRANUDOS-**VARIO-CPR Touch XL**, **VARIO-Touch** and **VARIO-S5** dosing device along with the corresponding accessories.
The Operating Instructions must be read carefully before use and kept on the device for direct use!
These Operating Instructions are only valid in conjunction with the Operating Instructions:

- for GRANUDOS **CPR Touch XL**, "CPR-Touch XL Measuring and Control Unit" No. **BA MR 001**.
- for GRANUDOS **Touch**, "GRANUDOS Touch Control Unit" **No. BA SW 010**.
- for GRANUDOS **S5** "GRANUDOS Touch Control Unit" No. **BA SW 014**.

1.2 Target group

Only our authorised partners and persons who have been trained in the functioning of the device are permitted to work on the system, provided that they have read and understood these operating instructions.
Electrical connection work may only be carried out by appropriately trained specialists!

1.3 Symbols used

The following types of safety notices and general notices are used in this document:



DANGER!
"DANGER" denotes a safety notice which, if disregarded, may lead to **serious or life-threatening injuries** or **serious material damage**!



CAUTION!
"CAUTION" denotes a safety notice which, if disregarded, may lead to **injuries, damage to health** or **material damage**!



ATTENTION!
"ATTENTION" denotes a safety notice that, if disregarded, may lead to **material damage**!



CORROSIVE!
"Corrosive" denotes a safety notice which, if disregarded when handling chemicals, may lead to injuries or material damage.



ESD SENSITIVE!
"ESD SENSITIVE" denotes electronic components that may be damaged by electrostatic discharges. The generally accepted safety precautions for ESD-sensitive devices must be observed when handling the devices!



Tip!
A "Tip" denotes information that may result in improvements in the operating process.



Mandatory sign
Use face protection!



Mandatory sign
Use protective gloves! In accordance with DIN EN 374



Mandatory sign
Use protective apron!



Mandatory sign
Use protective boots!

1.4 Warranty

All WDT devices and systems are manufactured using modern production methods and are subject to comprehensive quality control. However, should there be a reason for complaint, any compensation claims shall be directed to the company WDT in accordance with the general terms and conditions of warranty (see below).

General terms and conditions of warranty

The company WDT assumes a 2-year warranty, starting with the commissioning, up to 27 months after delivery; subject to correct installation and commissioning with a completed and signed commissioning protocol.
Exempt from this are wear parts such as seals, hoses, diaphragms, dosing screws, electrodes, roller carriers and other parts that are subject to mechanical or chemical wear and tear. For these we assume a warranty of 1/2 year.
Our enterprise resource planning system requires an invoice for each delivery (including warranty services). When returning a defective component, upon review you will receive a corresponding credit, if applicable. We request a return within 14 days.
The costs for subsequent damage and for the processing of warranty claims are excluded.
There are no warranty claims for damage caused by frost, water and electrical overvoltage or by improper handling.



Tip!
For the safeguarding of any warranty claims, please send the completed commissioning protocol, together with the defective component, to WDT. Without the commissioning protocol, we reserve the right to assert a warranty regulation.



ATTENTION!
It is not permitted to make any modifications to the device. If this specification is not observed, the warranty obligation and product liability will become void!

1.5 Additional information

Additional information concerning specific topics, such as designing of the dosing performance or description of the operating parameters, may be obtained from your specialist dealer, or directly from:

WDT Werner Dosiertechnik GmbH & Co KG
Hettlinger Strasse 17
86637 Wertingen - Geratshofen, Germany
Phone +49 8272 98697-0
Fax. +49 8272 98697-19
http://www.werner-dosiertechnik.de

2 Safety

2.1 Intended use

The GRANUDOS-VARIO dosing device may only be used for the purpose listed in the product description in *Chapter 3.2*! Also pay attention to the locally applicable regulations concerning accident prevention, occupational safety and drinking water protection!

NOTICE

The standard GRANUDOS booster pump is **not suitable for saline water (seawater/brine pools)**. A special version is available for this case. Pay attention to this when placing your order!

2.2 Safety notices

Carefully read and pay attention to the operating instructions prior to installation and use of the device! Work on the device and changes in the settings may only be carried out by properly instructed persons!

Pay attention to the warning notices on the device



2.2.1 Handling of chemicals, risks to humans and the environment

In the event of an emergency when dealing with chemicals you can also contact the Emergency Poison Centre!

Emergency number:

Munich Emergency Poison Centre (or any other Poison Centre)

Phone: +49 89 19240

Excerpt from the Accident Prevention Regulations, GUV-V D 5

Installation rooms for chlorination systems and storage rooms
Section 3a. (1) Chlorination systems must be installed in lockable rooms and the chemicals intended for the chlorination must be stored in lockable rooms.
Re Section 3a Para. 1:
This requirement ensures that chlorination systems and chemicals shall be protected against weather effects and unauthorised access.
(2) Rooms in accordance with Para. 1 must **not** be intended for the permanent presence of persons.

Re Section 3a Para. 2:
..... A "permanent" presence is given when persons are present in the room for more than 2 hours per day. Repair and maintenance work on the chlorination system are exempt from this.

2.2.2 Protective measures and rules of conduct



CORROSIVE! SAFETY EQUIPMENT!

The GRANUDOS-VARIO dosing system is used for the dosing of calcium hypochlorite granulate (colloquially: chlorine granulate) as well as the pH reducer from the supply canister.

These substances have a strong reaction when combined and release toxic chlorine gas outside of water. For this reason, the greatest possible care must be taken when working with chemicals and it is essential that personal safety equipment is worn:



Face protection, protective gloves, protective apron, boots.

The chlorine granulate and the sulphuric acid must not be mixed with each other or with other chemicals or substances!



Store the chemicals so that they are not accessible to unauthorised persons.

When storing chemicals, pay attention to the notices in *Chapter 3.5, Storage of chemicals*.

Additional information can be found in the chemical manufacturers' safety data sheets!



ESD SENSITIVE!

The electronic components in the device control units are sensitive to electrostatic discharge. The generally accepted safety precautions for ESD-sensitive devices must be observed when handling the devices.

Disconnect the device from the voltage supply

Discharge of personal static charge

3 Product description – scope of delivery

3.1 Scope of delivery / accessories

The scope of delivery includes the **"GRANUDOS-VARIO"** dosing system, which consists of the following components:

- Upright column with a rotatable drum holder
- Control unit with 7" touch colour display (not for type "**S5**")
- Dosing appliance for chlorine granulate
- Dosing appliance for acid
- Dissolving unit for chlorine and acid

The following options are available for the dosing system

a) Buffer tank with or without collecting basin (not for type "**S5**")
b) Remote display and remote access (not for type "**S5**")
c) Lifting device
d) Filter vent 1/4" with ball valve and hose, (for dirt filter d75)

3.2 Product description

The GRANUDOS dosing system for the disinfection of swimming pool water with calcium hypochlorite.

3.2.1 Functioning of GRANUDOS-VARIO, dosing unit

The GRANUDOS-VARIO dosing system uses calcium hypochlorite granulate and acid to prepare a pH-neutral, very low-concentrate chlorine solution (maximum 0.4% chlorine) for the disinfection of swimming pool water. The chlorine granulate and the acid needed for neutralisation are dosed in turns with intermittent breaks into the dissolving unit. The dosed chemicals are completely dissolved and fed into the piping of the swimming pool water circuit.
The GRANUDOS-VARIO dosing device is particularly well-suited for swimming pools with a water volume between 200 and 1500m³.

The functions of the GRANUDOS-VARIO **CPR Touch XL**

- Measuring free chlorine with open measuring cell, potentiostatic pH value, redox potential and temperature
- Controlling chlorine dosing using the measured value for free chlorine or redox potential.
- Dosing of chlorine granulate from the chlorine drum using the dosing screw and the knocker
- Dosing of acid (pH reducer) from the delivery canister using the peristaltic pump
- Filling a buffer tank with chlorine solution for disinfecting additional small pools using dosing pumps (option)

The functions of the GRANUDOS-VARIO-**Touch**

- Dosing of chlorine granulate from the chlorine drum using the dosing screw and the knocker
- Dosing of acid (pH reducer) from the delivery canister using the peristaltic pump
- Filling a buffer tank with chlorine solution for disinfecting additional small pools using dosing pumps (option)

The functions of the GRANUDOS-VARIO-**S5**

- Dosing of chlorine granulate from the chlorine drum using the dosing screw and the knocker
- Dosing of acid (pH reducer) from the delivery canister using the peristaltic pump

Functional principle of the GRANUDOS-VARIO-**CPR Touch XL** dosing system

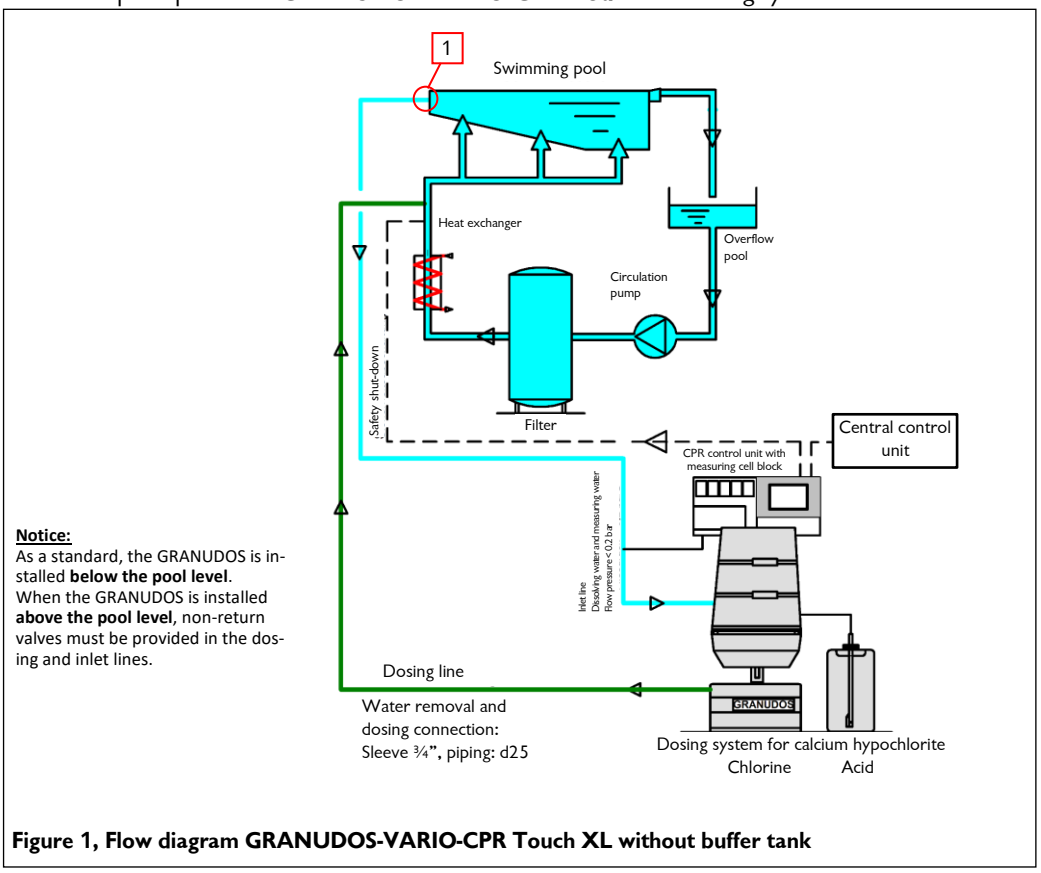

Notice:
As a standard, the GRANUDOS is installed **below the pool level**.
When the GRANUDOS is installed **above the pool level**, non-return valves must be provided in the dosing and inlet lines.

Figure 1, Flow diagram GRANUDOS-VARIO-CPR Touch XL without buffer tank

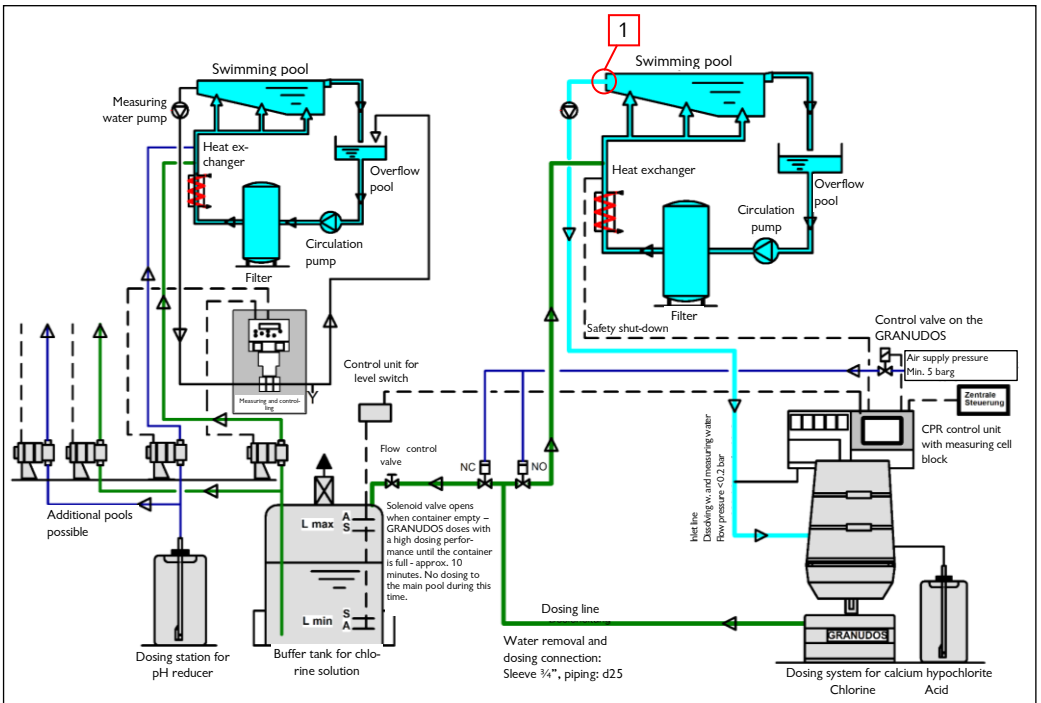

Figure 2, Flow diagram GRANUDOS-VARIO-CPR Touch XL with buffer tank

ATTENTION!

During installation, the locally applicable provisions must be observed, e.g., DIN 19643 in Germany.

Functional principle of the GRANUDOS-VARIO-**Touch** and VARIO-**S5** dosing system

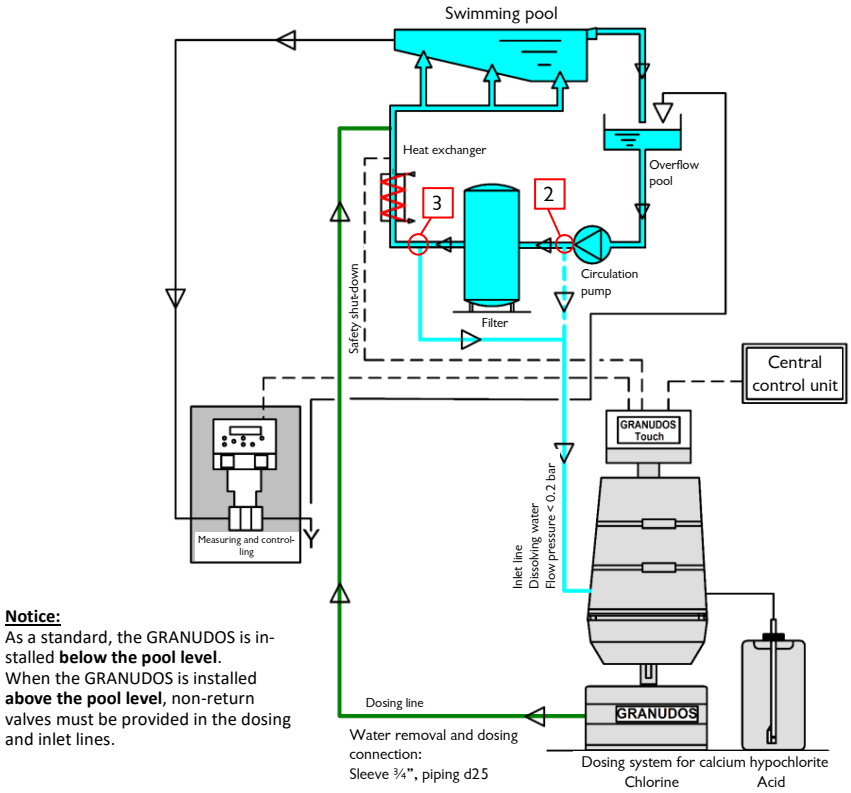

Notice:
As a standard, the GRANUDOS is installed **below the pool level**.
When the GRANUDOS is installed **above the pool level**, non-return valves must be provided in the dosing and inlet lines.

Figure 3, Flow diagram GRANUDOS-VARIO TOUCH and VARIO-S5 without buffer tank

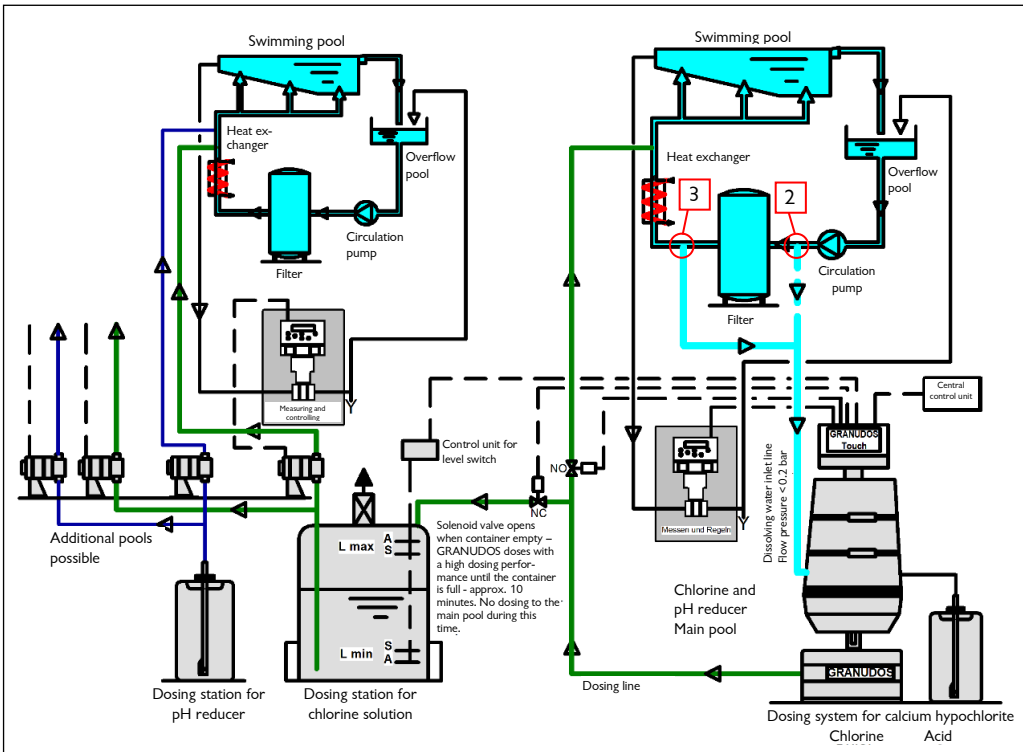

Figure 4, Flow diagram GRANUDOS-VARIO Touch with buffer tank

ATTENTION!

During installation, the locally applicable provisions must be observed, e.g., DIN 19643 in Germany.

3.2.2 Upright column with drum holder (standard)

The rotatable drum holder is mounted on the stable upright column (3). The chlorine drum (7) is set on this drum holder and strapped to the rear wall with 2 tension bands (8). Together with the drum holder, the drum can be rotated into the dosing position. The spring bolt (14) is used to lock the drum holder in its respective position. The dosing pump (15) for the dosing of the pH reducer and the dirt filter (31) for the booster pump of the dissolving unit are installed on the upright column.

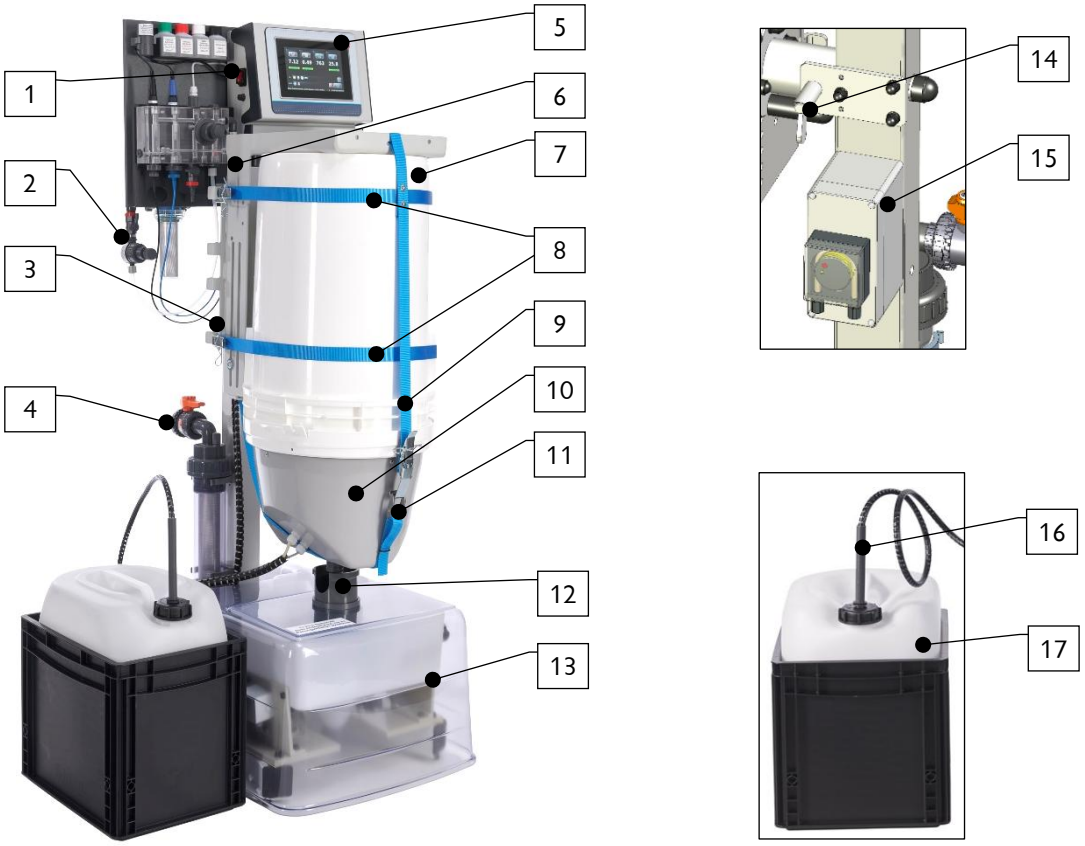

Figure 5, GRANUDOS-VARIO CPR

GRANUDOS-VARIO-CPR

1. Main switch
2. Pressure retention valve
3. Upright column with drum holder
4. Inlet ball valve
5. Control unit
   a) for GRANUDOS **CPR Touch XL with measuring cell block**, see separate operating instructions, "*CPR-Touch XL Measuring and Control Unit" No.* ***BA MR 001)***
   b) for GRANUDOS **Touch without measuring cell block**, see separate operating instructions, "*GRANUDOS Touch Control Unit" No.* ***BA SW 010)***
   c) for GRANUDOS **S5 without measuring cell block**, see separate operating instructions, "*GRANUDOS S5 Control Unit" No.* ***BA SW 014)***
6. Identification plate (on the right side of the upright pipe, covered)
7. Chlorine drum
8. Tension bands
9. Safety belt
10. Chlorine dosing unit
11. Clamping lever for the safety belt
12. Dust protection
13. Dissolving and flushing unit for chlorine granulate with cover
14. Spring bolt for the turning device (on the right side of the upright pipe, covered)
15. Dosing pump for pH reducer (on the right side of the upright pipe, covered)
16. Suction lance for pH reducer
17. Canister for pH reducer with collecting basin
18. Dust extraction (covered*), see Figure 11, Dust* extraction, *page 18.*

3.2.3 Chlorine dosing (standard)

The illustrated dosing head is screwed on the chlorine drum. It is used for dosing the chlorine granulate into the dissolving unit.

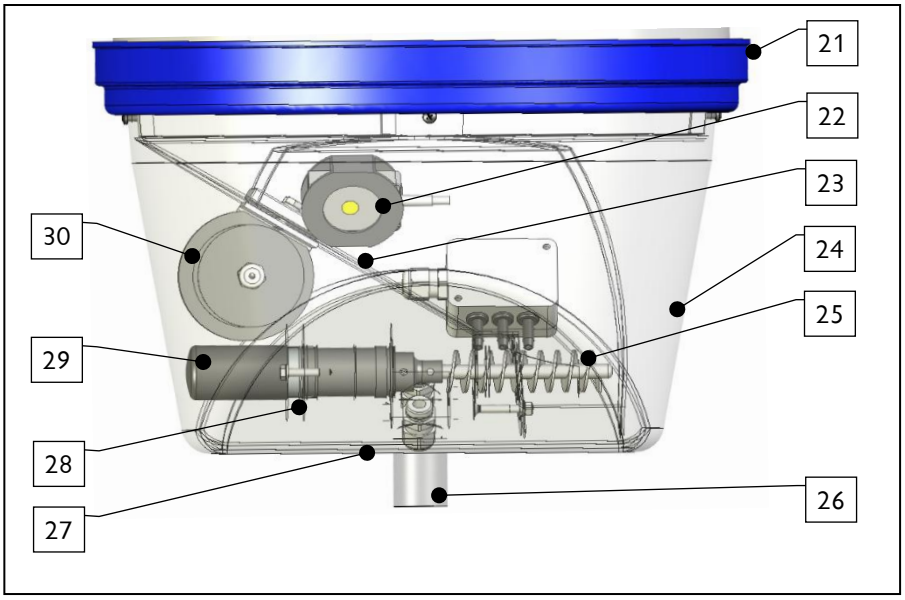

Figure 6, Dosing head for chlorine granulate

21. Screw ring (with drum thread)
22. Chlorine empty switch
23. Dosing hopper
24. Protective cover
25. Dosing screw
26. Heating nozzle (with dosing pipe)
27. Sealing washer
28. Motor bracket with screw tube
29. Dosing motor
30. Solenoid knocker

The dosing appliance consists of the dosing hopper (23) installed on the chlorine drum and the dosing unit. The latter consists of the dosing motor with flange (29), the dosing screw (25), the motor bracket (28) and the heating nozzle (26).
The heating of the dosing pipe prevents the condensation of water vapour, which could lead to a dosing blockage.

The dosing screw (25) conveys the calcium hypochlorite granulate from the Dosing hopper (23) into the flushing pipe *(44)* of the underlying dissolving unit. A Solenoid knocker (30) is installed for breaking up the chlorine granulate; during each dosing process, the solenoid knocker delivers a short blow to the dosing hopper, thus preventing the granulate from bridging over the dosing screw.
The chlorine dosing is organised in alternating cycles with the acid and is monitored. See OI “CPR-Touch XL Measuring and Control Unit”, No.: **BA MR 001**.

3.2.4 Dissolving unit (standard)

Overview dissolving unit

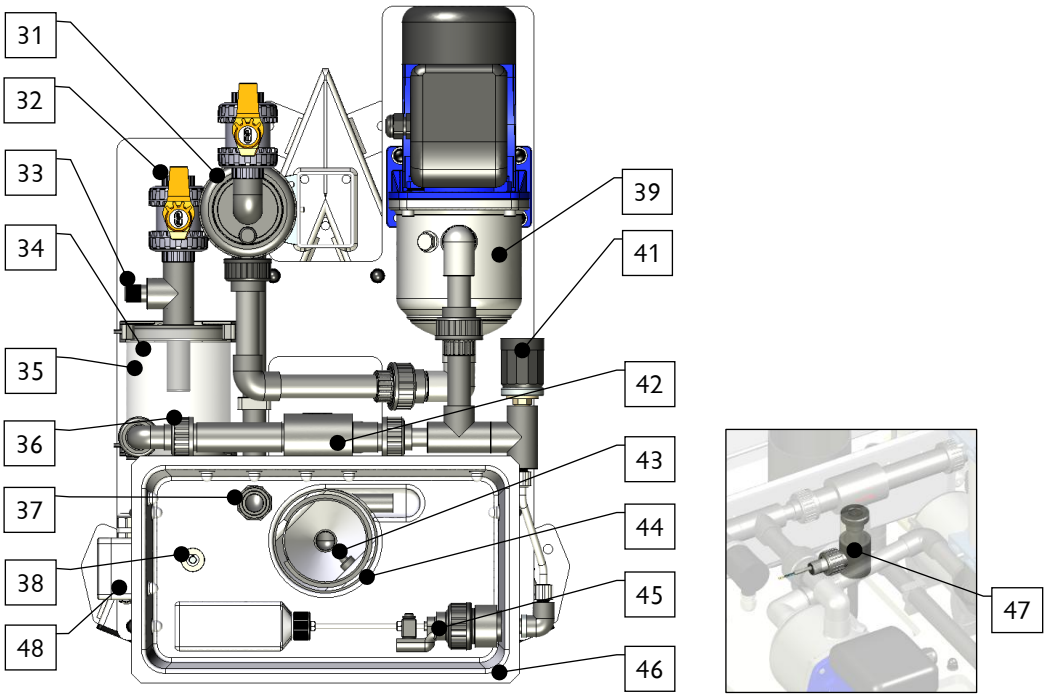

Figure 7, Dissolving unit from above

The dissolving unit consists of:

31. Dirt filter d75 mm
32. Outflow ball valve for booster water
33. Connection for manometer
34. No chlorine switch / sensor on the cyclone (option; not illustrated)
35. Dissolving and mixing cyclone
36. Pipe union with hole washer
37. Flushing tub overflow
38. Level switch min./max. Flushing tub
39. Booster pump (various designs)
40. —
41. Pressure switch
42. Injector
43. Dosing valve for pH reducer
44. Flushing pipe
45. Float control valve in the flushing tub inlet
46. Flushing tub
47. Flow switch for flushing tub
48. Connection socket for the switches

In the dissolving unit, the dissolving water originating from the filter circuit is separated downstream of the booster pump (39), and the chemicals are dissolved separately. A partial flow is directed into the flushing tub (46) via the float control valve (45). From there, it is suctioned off by the injector (42), together with the additional chemicals dosed in the flushing pipe (44). The chlorine granulate and the pH reducer (liquid) are dosed in turns with intermittent breaks into the water flowing through the flushing pipe. Approx. 50% of the chlorine granulate is dissolved in the injector; the remainder is kept in circulation in the dissolving cyclone (35) until it has been completely dissolved. Shortly after the dosing has started, the chlorine granulate can bee seen in the cyclone. An optical sensor (34) records the dosed chlorine granulate, which can bee seen in the cyclone shortly after the dosing has started. If no chlorine is detected 8 seconds after the start of the 2nd dosing cycle, the control unit reports a fault and the dosing is cancelled. (This function is only active during the filling of the buffer tank!)

Changes in the dissolving unit's water supply that cause the dissolving unit to no longer operate properly are recorded by the level switch (38), the flow switch (47) and the pressure switch (41). In these cases, the dosing of chemicals and also the booster pump, if applicable, will be turned off to prevent potential subsequent damage. For detailed information, see the Operating Instructions:

- "**CPR-Touch XL** Measuring and Control Unit", No.: ***BA MR 001***", or
- "GRANUDOS **Touch** Control Unit", No.: ***BA SW 010*** *or*
- "GRANUDOS **S5** Control Unit", No.: ***BA SW 014***.

A pressure switch (41) is installed in the booster pump's pressure line. This is intended to turn off the GRANUDOS in case of a pressure drop or the intake of air to prevent the pump from running dry.
In addition, a monitoring switch can be connected to turn off the dosing in the event of a fault in the filter system, e.g., no flow in the clean water line.

The flow switch (47) installed in the injector's (42) suction line is of essential importance for the GRANUDOS's operational safety! If the injector's suction capacity (minimum 150l/h) is too low, the switch body that has been pushed upward by the upward flow in the suction pipe drops down and the chemical dosing is turned off. This ensures that dosing only occurs in vigorously flowing water and the two chemicals **cannot** meet in the open area.

At the same time, the float control valve (45) blocks the inlet to the flushing tub in the event of a downtime or malfunction of the device. However, these actions cannot guarantee an absolute separation from the circulation circuit. If this is required, securely sealing shut-off valves would have to be installed in the inlet and dosing lines, or, corresponding to the pressure conditions, non-return valves or self-closing pneumatic valves. Pay attention to the valves' pressure loss during operation.

The flushing tub overflow (37) conducts the – chlorine-free – excess water that occurs in case of the "water max" fault to the duct.
The pressure retention valve (02) is used to supply the measuring device with a constant pressure and prevents the overflow of the flushing tub when no water is suctioned off. It is preset ex works.

To prevent the chlorine granulate and the acid from meeting and reacting with each other in the dissolving unit's open part, the following safety package has been installed:

- The dosing of the two chemicals occurs in set cycles with pauses between the dosing processes. The power supply of the two dosing motors is locked via a relay system in such a way that **both motors can never be running at the same time**!
- The water supply and water flow are monitored by the pressure switch (41), level switch (38) and flow switch (47).
- Dosing only takes place when the water flow is ensured.
- In the event of any deviation from the set target values, the dosing system is turned off and a corresponding fault indication is generated.



ATTENTION!

The use of sulphuric acid is generally possible up to a concentration of 50%. With higher concentrations or when using other acids (e.g., hydrochloric acid, dissolved sodium bisulphate, etc.), pay attention to a change in dosing performance and/or increased corrosiveness! We recommend consultation with the manufacturer!

The dissolving water supply should be separated from the swimming pool's filter function. There are 3 options to do this: (see also illustration in *Chapter 4.4.1, Installation of the dissolving and* measuring water supply.

Options for the water removal point:

Option 1, Swimming pool water directly from the pool (for **CPR Touch XL**)

- Water removal at least 80 cm below the upper edge of the water. The flow pressure at the GRANUDOS inlet must be at least 0.2 barg. Install the GRANUDOS a short distance below the level of the removal point. The height difference between the GRANUDOS and the water surface should be at least 2 m.
- Avoid a rising and falling of the inlet line in the piping to the GRANUDOS. This can lead to the formation of air cushions that may subsequently enter the pump during operation.

Option 2, Swimming pool water upstream of the swimming pool filter (for **CPR Touch XL + Touch + S5**)

Only use this alternative in exceptional cases when Option 1 cannot be realised!

- Water removal between circulation pump and swimming pool filter, before chemical dosing with 3/4" sleeve. The flow pressure at the GRANUDOS inlet must be at least 0.2 barg. It may be necessary to add the measuring water separately if the distortion is too strong on the way through the splash water pool. Check the water quality!

Option 3, Swimming pool water downstream of the swimming pool filter (for **Touch + S5**)

- Water removal between swimming pool filter and heat exchanger, before chemical dosing with 3/4" sleeve. The flow pressure at the GRANUDOS inlet must be at least 0.2 barg.

3.2.5 Acid dosing (standard)

The acid dosing in the GRANUDOS-VARIO is used to completely dissolve and neutralise the chlorine granulate and to correct the pH value. This generates a hypochloric acid. For each kg of chlorine granulate, approx. 0.5-1 litres of 37% sulphuric acid must be added. For this purpose, a dosing pump (15) is installed as standard. The acid dosing is controlled automatically by the control unit.
However, for the filling of the buffer tank, the acid dosing must be adjusted. During commissioning, the chlorine dosing must be adjusted so that the chlorine solution in the buffer tank has a pH value between 6.8 and 7.2. In that case, the calcium hypochlorite solution is completely dissolved. The solution is practically clear and lacks a strong chlorine odour. If the pH value is too low, the solution has a strong chlorine odour and becomes more corrosive. If the pH value is too high, the solution is cloudy and precipitation or deposits form in the buffer tank and in the dosing lines. The correct dosing ratio is set after measuring the pH value.

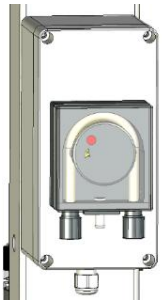

Figure 8, Acid dosing pump

The acid dosing is performed using a peristaltic pump. Peristaltic pumps are able to transport even the smallest dosing quantities reliably and evenly, even when air or gas bubbles are trapped in the suction line. Rotating rollers press the dosing hose against the casing wall, which pushes the liquid in the hose out from the rollers while simultaneously feeding behind it. It is exceptionally reliable and easy to operate.

The peristaltic pump sucks the acid from the acid canister, using the suction lance (16). The fill level in the acid canister is determined by a level switch for the empty indication.

Use acid based on 37-50% sulphuric acid as a pH reducer. Concentrated **hydrochloric acid** destroys the peristaltic pump – **dilute to below 10%!** In solutions consisting of **sodium bisulphate** "dry acid"**, do not use concentrations above 20%** (approx. equivalent to 10% sulphuric acid). It must be considered if the acid capacity is sufficient for the neutralisation.

Tipp

Tip!

In special cases, e.g., if the water is very hard and/or has a high pH value and/or a high dosing performance is required, it is recommended to use hydrochloric acid instead of sulphuric acid, to prevent the potential formation of gypsum residue due to high sulphate concentrations in the buffer tank (option).
With a hydrochloric acid concentration of more than 10%, a Viton hose must be used in the peristaltic pump! This is resistant to a maximum acid content of 33% and must be replaced every 6 months!

3.2.6 Buffer tank with/without collecting tub (only for **CPR Touch XL** and **Touch**) (option)

A 4-way level switch is installed in the buffer tank. The filling of the buffer tank is controlled exclusively via level switches in the buffer tank. After filling the buffer tank with chlorine solution, the dissolving water supply is shut off with a solenoid valve.

85. Activated carbon filter
86. Collecting tub PP, not shown
87. 4-way level switch,
    Minimum level alarm;
    Minimum level;
    Maximum level;
    Maximum level alarm;
88. Alarm switch in collecting tub, (not shown)
89. Buffer tank 200/300 l PE

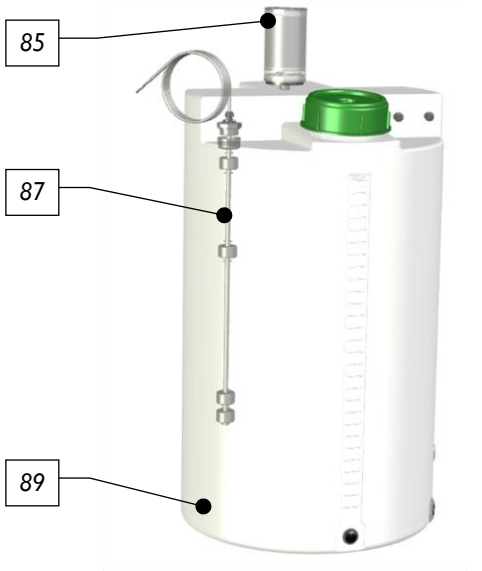

Figure 9, Buffer tank without collecting tub

- Buffer tank filling is started at the lower Buffer tank minimum control level.
- At the buffer tank's upper maximum control level, the filling is stopped; it is then followed by a flushing cycle to clean the dissolving unit: initially for 20 seconds with acid, followed by 20 seconds with water only.
- At the Minimum level alarm, an alarm message is shown on the display.
- At the Maximum level alarm, an alarm message is shown on the display.

Contact positions

When the container is half full, the level switches' contacts are set as follows:

Level position →	Contact
Minimum level →	open
Minimum level-Alarm →	open
Maximum level →	open
Maximum level-Alarm →	closed

An activated carbon filter (*85*) is screwed on top of the buffer tank. It is used to clean the chlorine-containing air when filling the buffer tank and for venting and aerating.

3.2.7 GRANUDOS control unit (standard)

- for GRANUDOS **CPR Touch XL**, see OI "CPR-Touch XL Measuring and Control Unit" No. **BA MR 001**.
- for GRANUDOS **Touch**, see OI "GRANUDOS Touch Control Unit" **No. BA SW 010**.
- for GRANUDOS **S5**, see OI "GRANUDOS S5 Control Unit" No. **BA SW 014**.

3.2.8 Dust extraction (option)

The dust extraction is used to reduce the intrusion of dust in the vicinity of the device. The use of granulates with an increased dust content may lead to a minor dust discharge at the device. This will subsequently settle on the protective cover. The dust extraction is based on the water jet nozzle (injector) principle

The flushing of the dust extraction is used for the automatic cleaning of the flushing pipe and the dust extraction's injector. During operation, it is possible that **the chlorine dosing and the flushing are active simultaneously**. This constitutes a **normal operating state**.

The flushing interval is controlled via a relay. This is preset ex works to 10 s flushing and 1 h pause. To change the parameters, see the OI for the respective control unit.

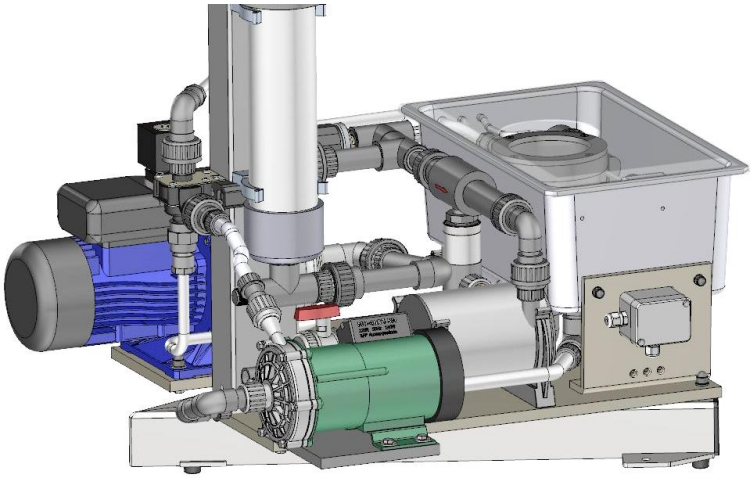

Figure 10, Dissolving unit with dust extraction

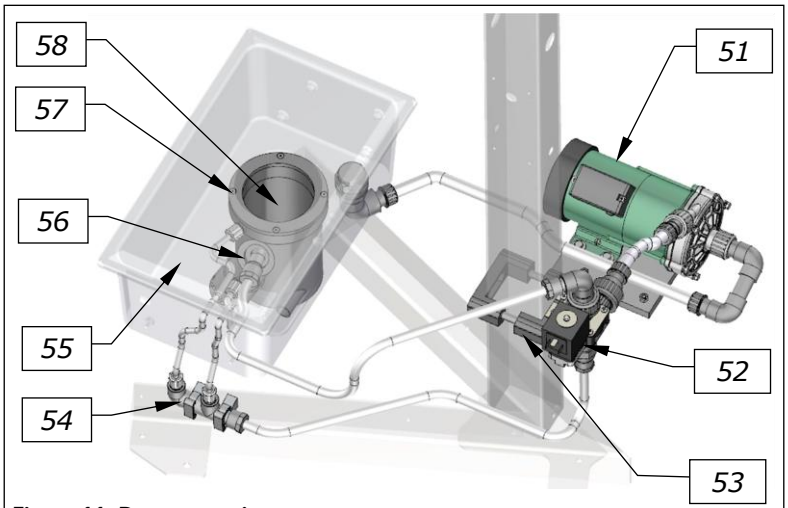

Figure 11, Dust extraction

51. Dust extraction pump
52. Solenoid valve
53. Pipe clamp
54. Flushing water distributor
55. Flushing tub lid (transparent)
56. Injector
57. Flushing ring assembly group
58. Flushing pipe / Dust extraction swirler assembly group

3.3 Identification of the device / Identification plate

Enter the data from your device's identification plate here.

Field 1:	Complete the type identification	Field 4:	Serial no.:
Field 2:	Enter drum type	Field 5:	Enter date of manufacturing
Field 3:	Code no.:		

GRANUDOS **CPR Touch XL** identification plate



GRANUDOS **Touch** identification plate

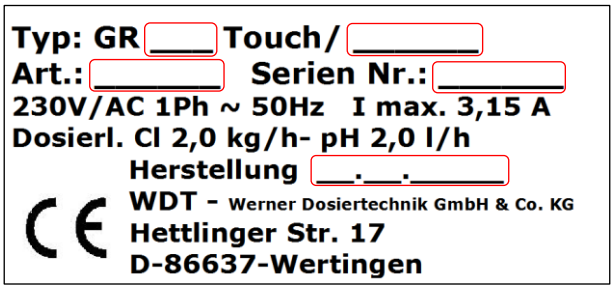

GRANUDOS **S5** identification plate

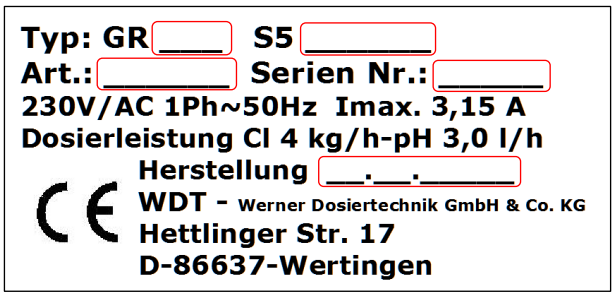

3.4 Technical data

	GRANUDOS-VARIO-**CPR Touch XL**	GRANUDOS-VARIO-**Touch**
Dimensions and weights:		
Device dimensions	W 60 cm, D 70 cm, H 140 cm	W 60 cm, D 70 cm, H 140 cm
Device space requirement (base)	W 130 cm, D 80 cm, H 200 cm	W 130 cm, D 80 cm, H 200 cm
Space requirement, including operation and maintenance	W 140 cm, D 170 cm, H 210 cm	W 140 cm, D 170 cm, H 210 cm
Empty weight / operating weight	approx. 40 kg / 85 kg	approx. 38 kg / 83 kg
Connection data		
Electrical connection data	230 VAC/50 Hz ± 10%, 600 W, I max. 3.15 A, safety plug	
Protection class	IP 54	
Hydraulic connection data	Inlet DN25 Outflow DN20 Overflow dissolving unit DN20 Drain collecting tub DN25/32	Inlet DN25 Outflow DN20 Overflow dissolving unit DN20 Drain collecting tub DN25/32
Required duct connection	At least DN25	At least DN25
Operating pressure Required inlet pressure Counter-pressure	max. 2.5 barg min. 0.2 barg 0 - 1.5 barg (depending on inlet pressure)	max. 2.5 barg min. 0.2 barg 0 - 1.5 barg (depending on inlet pressure)
Dissolving water supply	Extraction from the swimming pool with booster pump; flow pressure min. 0.2 barg In exceptional cases: In exceptional cases: Removal between circulation pump and swimming pool filter; before chemical dosing using booster pump; Flow pressure min. 0.2 bar	Removal between swimming pool filter and heat exchanger; before chemical dosing using booster pump; flow pressure min. 0.2 barg In exceptional cases: Removal between circulation pump and swimming pool filter, before chemical dosing using booster pump; flow pressure min. 0.2 bar
Operating data:		
max. dosing performance: Dosing unit 2 kg Dosing unit 4 kg	 Chlorine: max. 2 kg/h (1) Acid: max. 3 l/h (2) Chlorine: max. 4 kg/h (1) Acid: max. 3 l/h (2)	 Chlorine: max. 2 kg/h (1) Acid: max. 3 l/h (2) Chlorine: max. 4 kg/h (1) Acid: max. 3 l/h (2)
Water flow	approx. 800 – 1000 l/h	approx. 800 – 1000 l/h
Filling capacity of the dosing device	max. 1200 l/h	max. 1200 l/h
Booster pump	Lo.: 390 W, 230 V, 1.95 A; Cal.: 330 W, 230 V 2.5 A	
Medium temperature Ambient temperature Humidity technical room	5°C to 35°C 5°C to 35°C Max: 70%	5°C to 35°C 5°C to 35°C Max: 70%
Hypochlorous acid concentration	Dosing unit 2 kg: max. 0.2% Dosing unit 4 kg: max. 0.35%	Dosing unit 2 kg: max. 0.2% Dosing unit 4 kg: max. 0.35%
Room ventilation (in and out)	According to the locally applicable provisions, e.g., for Germany DIN 19643-1 ventilation mandatory	
Material	Upright column: Steel, galvanised and painted Other functioning parts: PVC or PE Seals: EPDM, Viton	Upright column: Steel, galvanised and painted Other functioning parts: PVC or PE Seals: EPDM, Viton

Footnotes regarding the technical data

(1) The dosing performance for the chlorine granulate depends on the type of granulate: In case of a high dust content in the granulate or with very coarse materials > 3 mm or elongated grains, the dosing performance may be significantly reduced. If the maximum dosing performance is required, a granulate with a low dust content must be used.

(2) This performance is required for neutralisation with a high chlorine dosing performance, using 37% or 50% sulphuric acid.

	GRANUDOS-VARIO-**S5**	Buffer tank GRANUDOS-PB (option) for **CPR Touch XL** and **Touch**
Dimensions and weights:		
Device dimensions	W 60 cm, D 70 cm, H 140 cm	D 80 cm, H 130 cm
Device space requirement (base)	W 130 cm, D 80 cm, H 200 cm	W 90 cm, D 90 cm, H 180 cm
Space requirement, including operation and maintenance	W 140 cm, D 170 cm, H 210 cm	W 90 cm, D 170 cm, H 210 cm
Empty weight / operating weight	approx. 38 kg / 83 kg	200 l = 10/210 kg 300 l = 15/315 kg
Connection data		
Electrical connection data	230 VAC/50 Hz ± 10%, 600 W, I max. 3.15 A, safety plug	—
Protection class	IP 54	—
Hydraulic connection data	Inlet DN25 Outflow DN20 Overflow dissolving unit DN20 Drain collecting tub DN25/32	Inlet DN20 Outflow DN15 (suction lance)
Required duct connection	At least DN25	
Operating pressure Required inlet pressure Counter-pressure	max. 2.5 barg min. 0.2 barg 0 - 1.5 barg (depending on inlet pressure)	Pressureless
Dissolving water supply	Removal between swimming pool filter and heat exchanger before chemical dosing using booster pump In exceptional cases: Removal between circulation pump and swimming pool filter, before chemical dosing , using booster pump; flow pressure min. 0.2 bar	—
Operating data:		
max. dosing performance: Dosing unit 2 kg Dosing unit 4 kg	 Chlorine: max. 2 kg/h (1) Acid: max. 3 l/h (2) Chlorine: max. 4 kg/h (1) Acid: max. 3 l/h (2)	
Filling volume		200 l/300 l
Water flow	approx. 800 – 1000 l/h	
Filling capacity of the dosing device	max. 1200 l/h	
Booster pump	Lo.: 390 W, 230 V, 1.95 A; Cal.: 330 W, 230 V 2.5 A	
Medium temperature Ambient temperature Humidity technical room	5°C to 35°C 5°C to 35°C Max: 70%	5°C to 35°C 5°C to 35°C Max: 70%
Hypochlorous acid concentration	Dosing unit 2 kg: max. 0.2% Dosing unit 4 kg: max. 0.35%	max. 0.35%
Room ventilation (in and out)	The locally applicable provisions must be observed, e.g., DIN 19643 for Germany	
Material	Upright column: Steel, galvanised and painted Other functioning parts: PVC or PE Seals: EPDM, Viton	Container: PE Connections: PVC

Footnotes regarding the technical data

(1) The dosing performance for the chlorine granulate depends on the type of granulate: In case of a high dust content in the granulate or with very coarse materials > 3 mm or elongated grains, the dosing performance may be significantly reduced. If the maximum dosing performance is required, a granulate with a low dust content must be used.

(2) This performance is required for neutralisation with a high chlorine dosing performance, using 37% or 50% sulphuric acid.

3.4.1 Requirements for the calcium hypochlorite granulate

Based on the experience gained in the past 30 years with the dosing of calcium hypochlorite granulate using the GRANUDOS we discovered that the quality of the granulate has a significant impact on the dosing safety. Since safety is of extraordinary importance in swimming pool technology, we define here our minimum requirements for the calcium hypochlorite granulate. If these quality criteria are met, a proper dosing operation can be assumed.

The following can be checked upon delivery to gain an initial impression of the quality:
The granulate must be white, free of clumps, and no strong chlorine odour must be present when opening the drum.

Specification:

- Calcium hypochlorite concentration: → higher than 70%
- Water-insoluble ($Ca(OH)_2$, $CaCO_3$): → less than 4%
- Water (crystal water due to safety): → higher than 10%

Grain size:

- Dust: → smaller than 0.15 mm (100 mesh) → smaller than 1%
- Fraction of coarse particles: → larger than 2.5 mm (8 mesh) → less than 5%

3.5 Transport/storage

Please check the devices immediately upon receipt for potential transport damage.



ATTENTION!

The systems and devices can be damaged by frost or high temperatures. Avoid exposure to frost during transport and storage!
Do not store systems and devices next to objects with strong heat emission or in direct sunlight. The device may only be transported and stored in its original packaging. Please ensure careful handling.

Storage of chemicals



DANGER!

Please pay attention to the chemicals manufacturers' safety data sheets!

In addition, please pay attention to the provision regarding the **storage of chemicals TRGS 510**!

General

- Store chlorine dry and cool
- Keep a chlorine supply at hand for less than 6 months
- Use a suitable collecting basin! Check the locally applicable regulations for collecting basins without type approval. In Germany, for example: For collecting basins with an individual volume of more than 20 litres, a building authority approval is required.

4 Installation

4.1 Selecting the installation site

Pay attention to the following in regard to the installation site:

1. A freely accessible place of installation should be selected to facilitate operations and subsequent maintenance tasks.
2. Meet the dimensions for the floor drain and the temperature specifications for the ambient air and medium in accordance with the provisions in *Chapter 3.4 Technical Data.* No flammable vapours, dust or gases may be present in the immediate vicinity of the device.
3. The device must not be exposed to the elements. It may not be installed outdoors. The system must be protected from frost and direct sunlight.
4. An electricity grid connection and a duct connection must be available. Depending on the device configuration, an Internet connection may also be required.
5. The operating room must not be used as a recreational space. (Max. 2 hours per day), also consult the locally applicable accident prevention regulations (Germany BGR-GUV-R 108).
6. It must be possible to vent and aerate technical areas so that hazardous substances do not occur in health-hazardous concentrations (from accident prevention regulations BGR-GUV-R 108). If these conditions are met, there should be no problems with the dosing. However, a strong air flow at the dosing device must be avoided.
7. Collecting basins must be available for use with the chemical canisters and the buffer tank, if necessary.
8. It must comply with the accident prevention regulations and should not be accessible to unauthorised persons. A separate storage space must be available for the chemicals.

4.2 Installation instructions / installation suggestion

- Remove transport safety devices
- Attach warning and notice signs in accordance with the locally applicable accident prevention regulations (Germany: BGR-GUV-R 108) at the designated positions.



NOTICE

The standard GRANUDOS booster pump is **not suitable for saline water (seawater/brine pools)**. A special version is available for this case. Pay attention to this when placing your order!

4.2.1 Suggested installation

Suggested installation GRANUDOS-VARIO without buffer tank

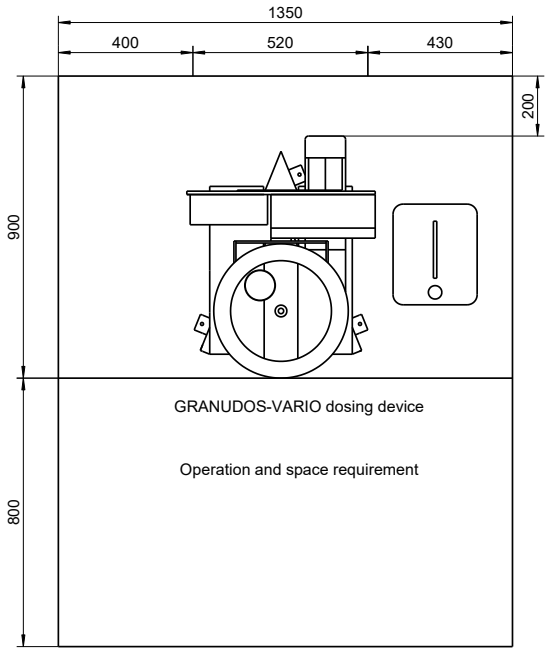

Figure 12, Suggested installation, incl. space requirements without buffer tank

Suggested installation GRANUDOS-VARIO with buffer tank

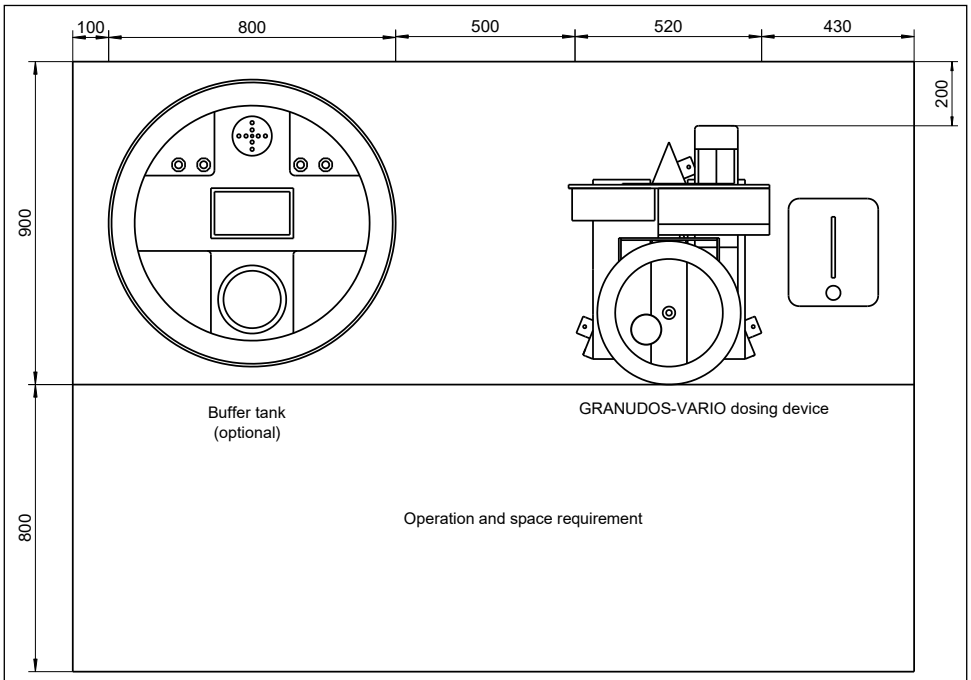

Figure 13, Suggested installation, including space requirements with buffer tank

4.3 Mechanical installation

The dosing device is delivered completely pre-assembled with the control unit and the dirt filter.
Ensure that there is sufficient clearance for operating and servicing the device!

4.3.1 Installation of the GRANUDOS-VARIO dosing device

Place and align the GRANUDOS dosing system on a suitable, level foundation in the technical room. Ensure that there is sufficient clearance for operating and servicing the device.



ATTENTION!
The GRANUDOS-VARIO must be attached to the floor using the 4 screws and dowels included in the delivery!

Installation material

Spare parts bag with manometer and washers for the injector	Accessories for acid pump
	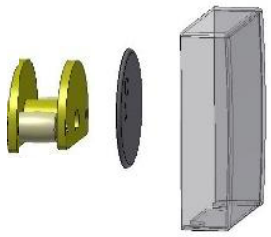

4.3.2 Installation of the buffer tank (option) with / without collecting tub

Place and align the collecting basin on a suitable, level foundation in the technical room. Place the empty buffer tank in the collecting basin and check for secure footing. The buffer tank may only be operated with a suitable collecting basin. (collecting basin may be supplied by the customer, if applicable)
Ensure that there is sufficient clearance for operating and servicing the device.

4.4 Hydraulic installation



NOTICE

When using Captura swimming pool filters, an automatic vent must be installed in the swimming pool water cycle. Otherwise, fault may occur in the GRANUDOS system. For more detailed coordination, please contact WDT.

Integration into the water circulation: Type **CPR Touch XL**

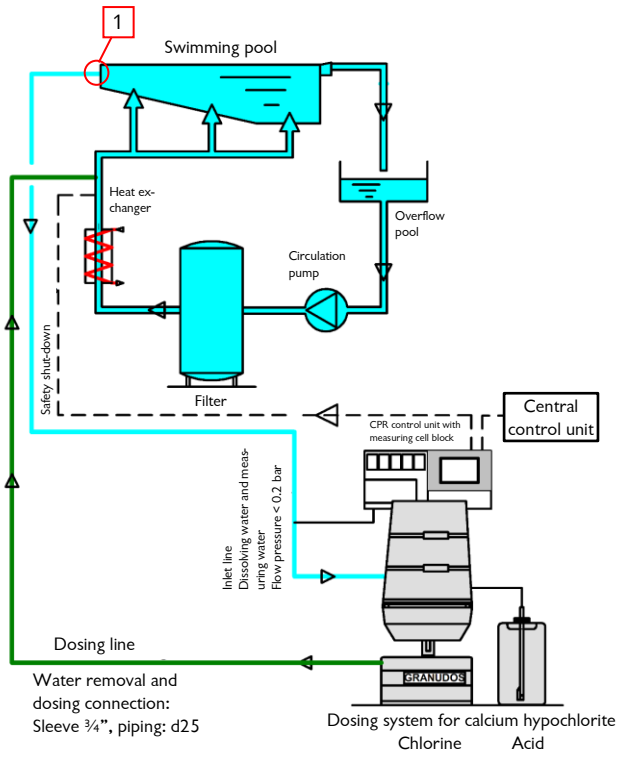

Notice:
As a standard, the GRANUDOS is installed **below the pool level**.
When the GRANUDOS is installed **above the pool level**, non-return valves must be provided in the dosing and inlet lines.

Figure 14, Flow diagram GRANUDOS-VARIO-CPR Touch XL without buffer tank

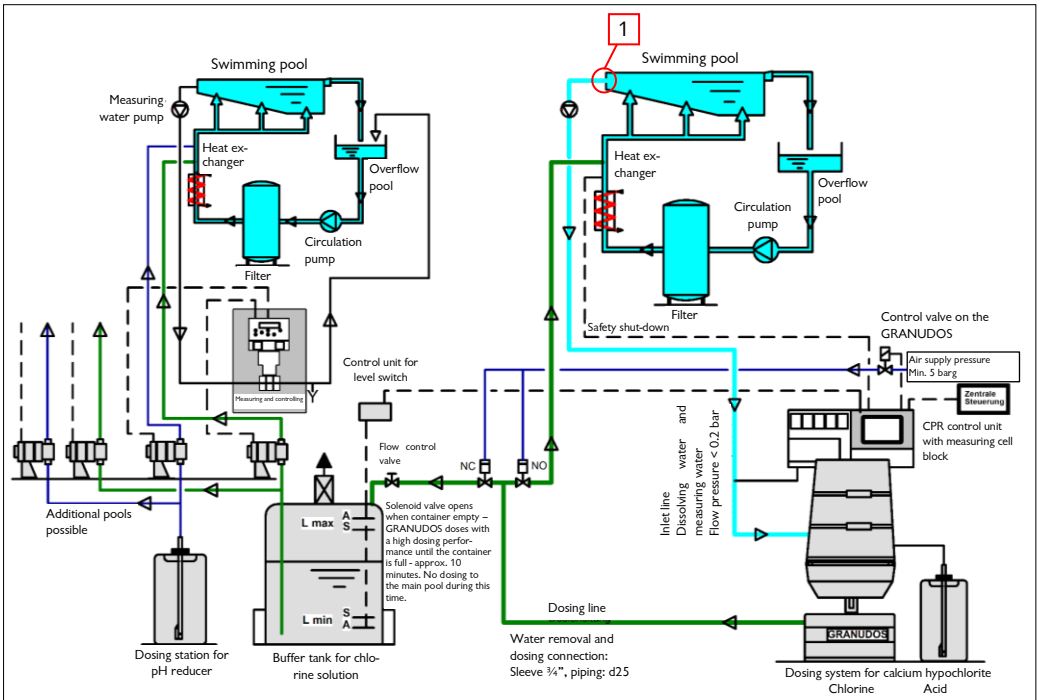

Figure 15, Flow diagram GRANUDOS-VARIO-CPR Touch XL with buffer tank

Integration into the water circulation: Type **Touch and S5**

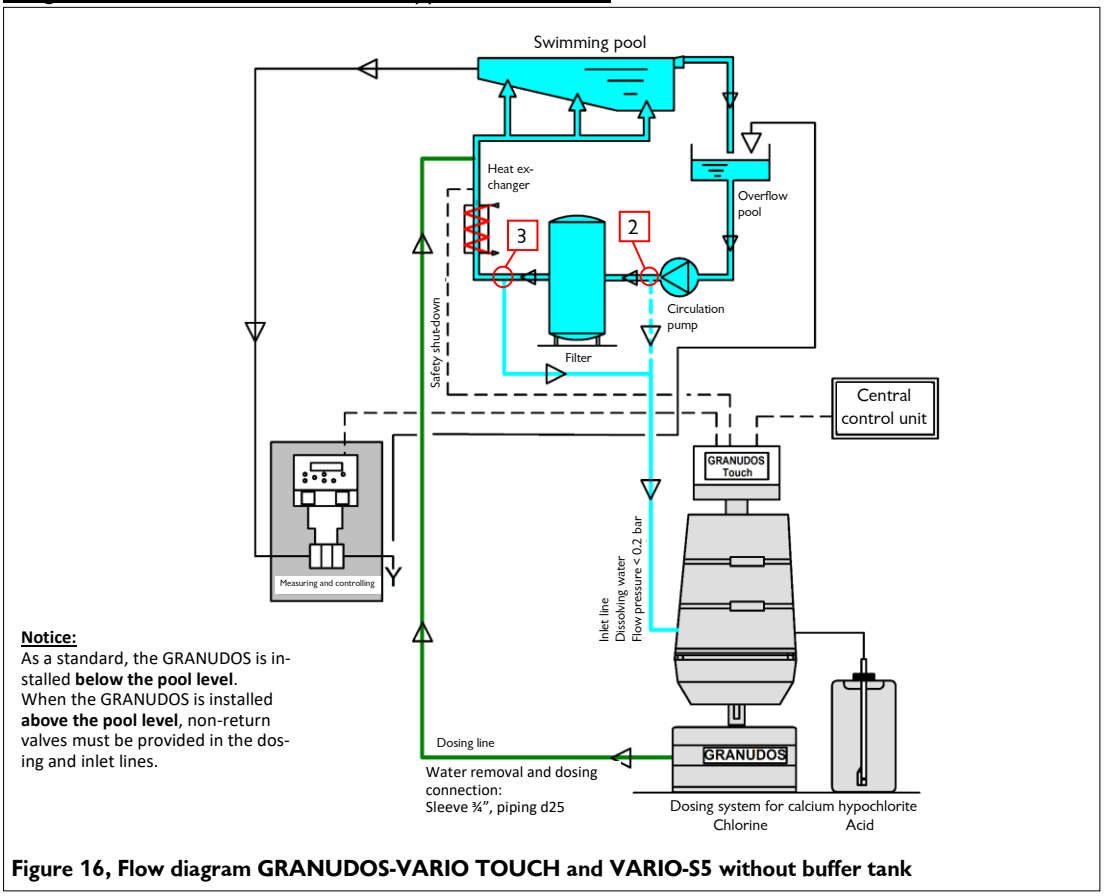

Notice:
As a standard, the GRANUDOS is installed **below the pool level**.
When the GRANUDOS is installed **above the pool level**, non-return valves must be provided in the dosing and inlet lines.

Figure 16, Flow diagram GRANUDOS-VARIO TOUCH and VARIO-S5 without buffer tank

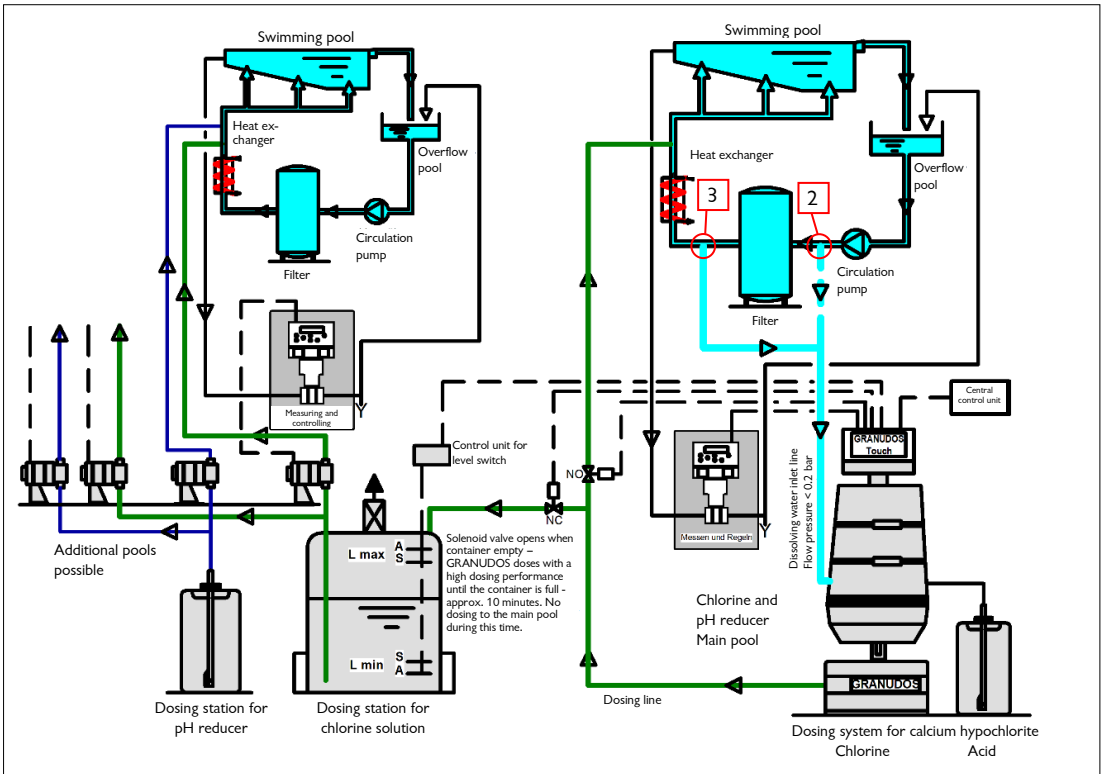

Figure 17, Flow diagram GRANUDOS-VARIO Touch with buffer tank



CAUTION!

During installation, the locally applicable provisions must be observed. In Germany, for example, DIN 19643.

During all installation work, the valves must be closed and the lines depressurised to prevent injury and damage.

Pressure conditions

When connecting the GRANUDOS to the swimming pool circulation, particular attention must be paid to the pressure conditions. The swimming pool circulation should have no impact on the supply of dissolving water to the GRANUDOS.
The table shows the maximum possible counter-pressures at the dosing point at the prevailing inlet pressure. The values in the table refer to the **flow pressure, i.e., the dynamic pressure** in the line.

Conditions of use:

With an inlet pressure of: →	**possible counter-pressure:**
0.3 bar →	1.0 bar
0.4 bar →	1.1 bar
0.5 bar →	1.1 bar
0.6 bar →	1.2 bar
0.7 bar →	1.3 bar
0.8 bar →	1.3 bar
0.9 bar →	1.4 bar
1.0 bar →	1.4 bar
1.1 bar →	1.5 bar
1.2 bar →	1.5 bar

The respective pressure values are listed on the GRANUDOS, without the inserted hole washer.
In addition, pressure loss in the piping must be taken into account; therefore, pressure loss should be kept at a minimum.
The GRANUDOS's inlet and drain are equipped with hose connections where the pressure during operation can be measured by means of the included manometer. **If the counter-pressure exceeds 1.5 bar, a stronger pump can be used; please consult with WDT.**

4.4.1 Installation of the dissolving and measuring water supply



ATTENTION!

Before beginning any connection works, ensure that all of the ball valves on the measuring cell block are closed.

The dissolving and measuring water supply for the GRANUDOS-VARIO should be separated from the swimming pool filter circuit so that the swimming pool circuit does not affect the uninterrupted supply with dissolving water.

Flow through the pool

Only a proper pool flow can achieve a satisfactory control of the auxiliary hygiene parameters, i.e., free chlorine, pH value and redox potential. The dosed chemicals must reach all areas of the pool within a short time. Even under stress, the concentrations measured in different areas of the pool must be approximately the same.

Water removal point (dissolving water and measuring water)

A partial flow of the dissolving water is used as measuring water. (GRANUDOS **Touch** does not have a measuring water device; this has no effect on the connection of the devices). Choosing the correct dissolving and measuring water removal point is crucial for the effectiveness of the measuring and control technology. If possible, the measuring water should be identical to the pool water. Changes in the pool's water quality should be detected as quickly as possible using measuring technology. This is the only way to quickly compensate for changes in the basin water quality by means of additional chemical dosing. The optimal removal point can be located by measuring the chlorine concentration at different points (e.g., downstream of the circulation pumps, mixed water, etc.) and comparison with the values from the basin water in various operating conditions.



ATTENTION!

No chemicals may be dosed upstream of the measuring water removal point. This would distort the measuring results.

If the basin water is conducted through an overflow gutter and a compensation pool (splash water pool), also used for the fresh water feed-in, only sampling the measuring water directly from the swimming pool basin will lead to satisfactory measuring and control results.
In new systems, **measuring water must be removed** directly from the pool, in accordance with **DIN 19643**!
If there are any existing connections, ensure that these are not blocked. The pipes should be kept as short as possible. The piping of the supply line in PVC must be executed in the dimension d25-3/4". Increase the nominal width for lines longer than 20 m or in case of poor pressure conditions.
Ensure that the connection sleeves for the water removal and the dosing point are completely open (metal sleeves may be rusted shut)

Line connection design

Line connections should always be installed laterally.

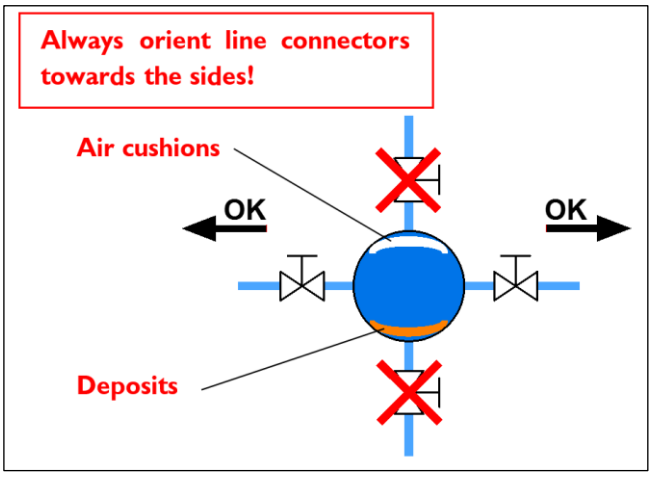

Figure 18, Line connections

Connect the inlet ball valve *(Pos 4, Figure 5)* of the GRANUDOS-VARIO to the water removal point. The separation of dissolving and measuring water occurs in the dosing device **(only for Flex-CPR Touch XL)**.

There are 3 options for the water removal point:

Option 1, *(see Figure 14 to Figure 17)* Swimming pool water directly from the pool (only for **CPR Touch XL**)

- Water removal at least 80 cm below the upper edge of the water. The flow pressure at the GRANUDOS inlet must be at least 0.2 barg. Install the GRANUDOS-VARIO a short distance below the removal point. The height difference between the GRANUDOS and the water surface should be at least 2 m.

- Avoid a rising and falling of the inlet line in the piping to the GRANUDOS-VARIO. This can lead to the formation of air cushions that may subsequently enter the pump during operation.

Option 2, *(see Figure 14 to Figure 17)* Swimming pool water upstream of the swimming pool filter (for **CPR Touch XL + Touch + S5**)

Only use this alternative in exceptional cases when Option 1 cannot be realised! (Not permissible in Germany and Austria)

- Water removal between circulation pump and swimming pool filter, before chemical dosing with 3/4" sleeve. The flow pressure at the GRANUDOS inlet must be at least 0.2 barg. It may be necessary to add the measuring water separately if the distortion is too strong on the way through the splash water pool. Check the water quality!

Option 3, Swimming pool water downstream of the swimming pool filter (for **Touch + S5**)

- Water removal between swimming pool filter and heat exchanger, before chemical dosing with 3/4" sleeve. The flow pressure at the GRANUDOS inlet must be at least 0.2 barg.

If the dosing device must be installed above the pool level

- Install a free-flowing non-return valve in the supply line to the GRANUDOS.
- Install a spring-loaded non-return valve in the dosing line to the clean water piping to prevent the flushing tub from draining when the system is turned off. (see installation diagram above - corresponding non-return valves are available)

If an overflow shall be excluded when the device is turned off or in the event of faults

- Install a solenoid valve 3/4" in the inlet and a non-return valve d25 or d32 in the drain. Check for minor pressure loss! Therefore, a supply pressure > 0.4 barg is required during commissioning to open the non-return valves!

Measuring water return flow (only CPR Touch XL)

The measuring water is automatically conducted into the dosing device's flushing unit and is thereby returned to the water circulation.
Optionally, the measuring water can also be directed into the drain.



ATTENTION!
For the measuring water recirculation, pay attention to the locally applicable provisions!

4.4.2 Installation of the dosing line



ATTENTION!
Due to the chlorine solution's concentration, thick-walled pipes in PVC PN16 must be used.

At a minimum, the piping of the dosing lines must be executed in the dimension **d25x2.8 mm in PVC PN16** (thick-walled). For longer dosing lines (above approx. 15 m) it is recommended to use the dimension d32x3.6 mm in PVC PN16 (thick-walled), due to the potentially higher pressure loss.

Install the dosing line from the GRANUDOS outflow to the dosing point. **Measuring water may never be removed downstream of the dosing point! A ball valve must be installed at the dosing point.**

4.4.3 Installation of the overflow line for the flushing tub

Screw the overflow nozzle into the flushing tub and install a correspondingly-sized line to the gully.

4.4.4 Connecting the buffer tank (option)



ATTENTION!

Due to the chlorine solution's concentration, thick-walled pipes in PVC PN16 must be used.

The buffer tank is connected to the chlorine line. 2 pneumatic valves are installed downstream of the chlorine dosing line's branch-off point, according to the flow diagram. These are supplied with air via a solenoid valve and are thereby controlled. Connect the pneumatic valves' control lines to the solenoid valve. The solenoid valve is connected to the on-site air supply.
The chlorine solution can be dosed from the buffer tank via on-site pumps at the auxiliary basins.

4.5 Electrical installation



DANGER DUE TO ELECTRICAL VOLTAGE!

The electrical installation must only be carried out by qualified electrical technicians!
Before any electrical work is carried out, the power supply must be switched off and secured against being reactivated!
During all installation work, the valves must be closed and the lines depressurised to prevent injury and damage.



ESD SENSITIVE!

The electronic components in the devices are sensitive to electrostatic discharges. The generally accepted safety precautions for ESD-sensitive devices must be observed when handling the devices.

The following applies, in particular:

- Do not pull or plug in socket connections under voltage.
- As the person handling the device, please discharge yourself electrostatically for at least 5 seconds prior to directly touching the devices, e.g., by touching a grounded part of the system or by wearing an ESD antistatic wrist strap connected to ground.

Electrical connection

4.5.1 Opening and closing the housing, GRANUDOS **CRP Touch XL** and GRANUDOS **Touch**

The housing is equipped with an "easy lock-in closure".

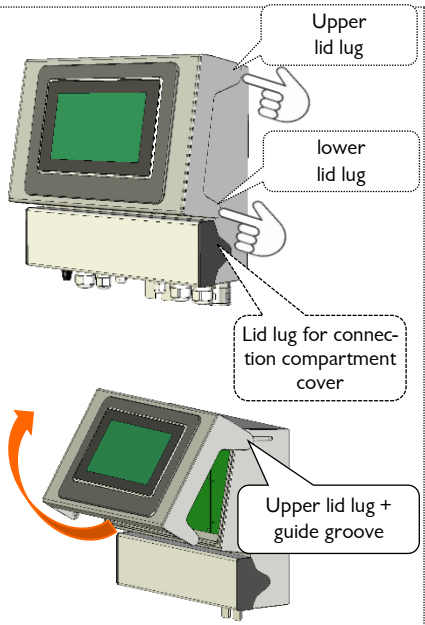

Figure 19, Control housing

Procedure

a) Open the display cover
Use your index fingers to lift the two lower lid lugs and the two upper lid lugs slightly outwards from the base housing. The display cover clips out to the front.

b) Now pull the display cover forwards.
The upper lid lugs run in guide grooves up to the front lock-in position.

The same procedure applies to the connection compartment cover (bottom).

c) Then open the display cover upwards.

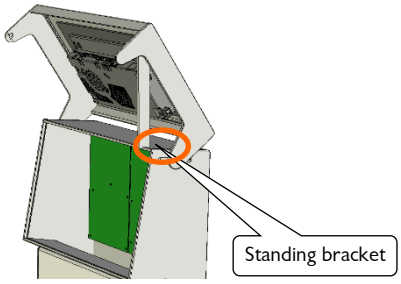

Figure 20, Control housing

d) Fold down the standing bracket, support it on the base housing and lock it in place.

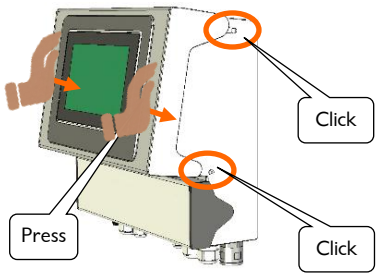

Figure 21, Control housing

e) Close the housing in reverse sequence. Release the standing bracket to the rear and fold the cover downwards.

f) Now unlock the upper lid lugs and push the lid backward onto the base housing.

g) In order to tightly reseal the housing, press gently on the four corners of the housing. The housing lid will close with a soft, audible click

h) Ensure that all lid lugs are always clipped in to prevent corro-sive chlorine dust from entering!

Proceed in the same way for the connection compartment cover (bottom).

Signals to and from outside, see wiring diagrams



ATTENTION!

External control of the inputs must be done potential-free.
Pay attention to the maximum contact current capacity of the relay contacts.

The power supply for the dosing device must always be ensured.

The external control inputs and outputs (shut-down in the event of fault, disinfectant dosing during back-washing, etc.) must be clamped to the clamping connectors of the baseplate in the control housing. For potential-free connections, 3 m of flexible cable 7x0.52 are included in the scope of delivery. Please do not use any fixed wire conductors. *See wiring diagram in Chapter 9.2, Wiring* diagrams.

Cable insertions

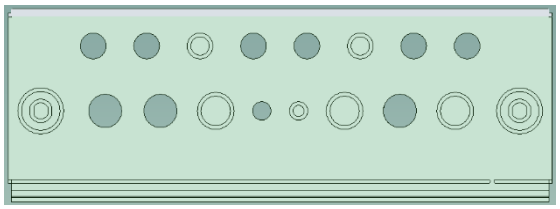

The housing comes with several factory-made free screw connections. Several push-outs for metric screwed cable glands are available for additional insertions.
The two external screw connections with M25 are intended for the insertion of a preassembled interface cable with RJ45 plug.



ATTENTION!
Please pay attention to the spatial separation between energy and signal lines when inserting additional cables. The crossing of energy and signal lines must be avoided!

Upon completion of the work, the housing must be properly closed again!

The device is equipped with a temperature control. This temperature control can be used to regulate the pool water temperature. If the pool is heated by means of a flow-through heat exchanger, it must be ensured that the associated heating circuit pump can only be activated when the filter system is in operation!
Please remember that the regulation of the pool temperature can only be guaranteed if the filter operation times are set to an appropriate duration.
In order to achieve a precise measuring result, the sensor must be installed by means of an immersion sleeve in the swimming pool's piping upstream of the swimming pool filter!



ATTENTION!
Immersion sleeves that come into contact with the swimming pool water must be corrosion-resistant.

Electrical connection

4.5.2 Opening and closing the housing, GRANUDOS **S5**

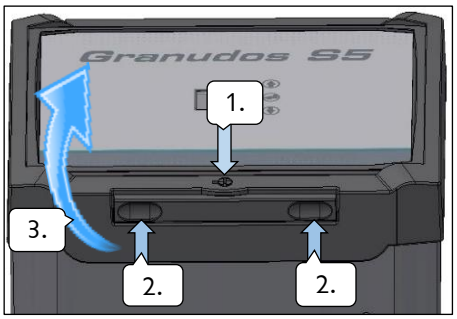

Open housing

1. Loosen the screw cap.
2. Push in both recessed grips until the housing opens.
3. Fold the lid upward.

Close the housing in reverse order. The housing lid will close with a soft, audible click. Ensure that the housing lid is securely locked.

Figure 22, Control housing GR S5

For electrical installation, see wiring diagrams in the control unit's terminal casing or in *Chapter 9.2 Wiring* diagrams.

5 Commissioning

5.1 Commissioning - Remarks

ATTENTION!

Also pay attention to this chapter for each recommissioning following an operating pause. Do not switch on the GRANUDOS-VARIO until the flushing tub has been filled.

The work described here may only be carried out by trained specialist personnel from a specialist company. Prior to commissioning, the installed systems must be checked for proper installation and leaks.
Please use the commissioning protocol in *Chapter 9.3.* for commissioning. The device is delivered with defined factory settings. You can find the setting values in the operation data sheet in *Chapter 9.4.*

ATTENTION!

During the installation of the piping and the electrical system, foreign objects may have fallen into the flushing unit, which could lead to potential faults in the floating valve or the suction pipe of the flow switch. Remove foreign objects!

5.2 Commissioning

Prior to starting the commissioning, ensure that the ball valves are connected to the measuring cell block of the control unit (5).

5.2.1 Installation of peristaltic pump, roller carrier

The acid pump is installed on the right side of the UPRIGHT COLUMN of the GRANUDOS-VARIO.

1. Remove the clipped-in, transparent pump cover and the blue safety disc. Pull the hose bracket forward out of the guide in the casing.

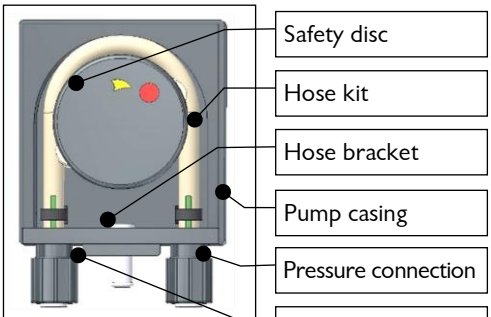

Figure 23, Peristaltic pump

2. Push the provided yellow roller carrier onto the axle.

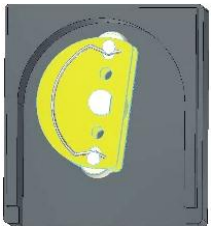

Figure 24, Insert roller carrier

3. Insert the hose bracket into the guides of the casing until it firmly snaps into place.



Figure 25,
Insert the hose bracket

4. Turn the roller carrier counter-clockwise while carefully pushing the hose inside the casing until the entire hose is contained in the casing.

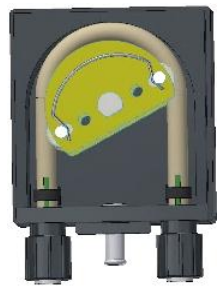

Figure 26,
Turn the roller carrier

Now replace the safety disc and the transparent pump cover. This completes the installation of the roller carrier.

For dismantling the roller carrier and the hose bracket, proceed in the reverse sequence.
Plug the safety plug in a corresponding power socket.

5.2.2 Preparing acid dosing for operation



PROTECTIVE CLOTHING!

Personal safety equipment must be put on before starting work with chemicals: Protective gloves, apron, face protection, respiratory protection, boots.
Pay attention to the specifications for each chemical contained in the safety data sheets.

Connect/change acid canister

Toxic fumes may occur when handling acids. Do not inhale any fumes.

1. Unscrew the screw cap with the suction lance from the empty acid canister, place the suction lance in the collecting basin, and immediately close the empty canister, using the original screw cap. (Does not apply during the initial commissioning)
2. Lift the empty canister out of the collecting basin.
3. Place the full acid canister into the collecting basin
4. Unscrew the screw cap from the full acid canister, immediately insert the suction lance into the canister and close it securely.
5. Keep the acid canister's original screw cap until the next time the acid is replaced.
6. Press the Acid counter 

button on the display. This updates the acid level on the display. (only for CPR Touch and Touch)

5.2.3 Attaching/changing the drum



PROTECTIVE CLOTHING!

Personal safety equipment must be put on before starting work with chemicals: Tight-sealing goggles, respiratory protection, protective gloves, apron, face protection, boots

Pay attention to the safety data sheets for each chemical.



ATTENTION!

At the time of the order, the GRANUDOS-VARIO was designed for a certain type of chlorine drum. As a rule, the dosing head does not fit on chlorine drums by other manufacturers. If a dosing head is improperly installed on a different drum, it may detach from the drum during turning, causing the chlorine granulate to drop to the ground. The removal of the chlorine is unpleasant and time-consuming! This circumstance should be taken into account when purchasing the chlorine.

The chlorine granulate and the acid must not be mixed with each other or with other chemicals or substances!

Remove potential encrustations from the *dosing hopper (23)* to avoid faults in the chlorine dosing.

The following can be checked upon delivery to gain an initial impression of the quality:
The granulate must be white, free of clumps, and no strong chlorine odour must be present when opening the drum.

For more detailed chlorine specification, *see Chapter 3.4.1 on page 22*



Tip!

It is recommended to roll the new, sealed drum several times on the floor prior to attaching it to the dosing device to loosen any potential clumps in the granulate.

5.2.3.1 Attaching the drum with tension band and safety belt

When changing the drum, stop the dosing via the 

button **(type CPR Touch XL + Touch)** or via the arrow keys **(type S5)** (Dosing OFF).



DANGER!

When changing the drum, ensure that the dissolving unit (13) is covered. Negligence, the dropping of large amounts of granulate or a lack of cover can cause deflagration!

Overview GRANUDOS-VARIO-CPR Touch XL and GRANUDOS Touch

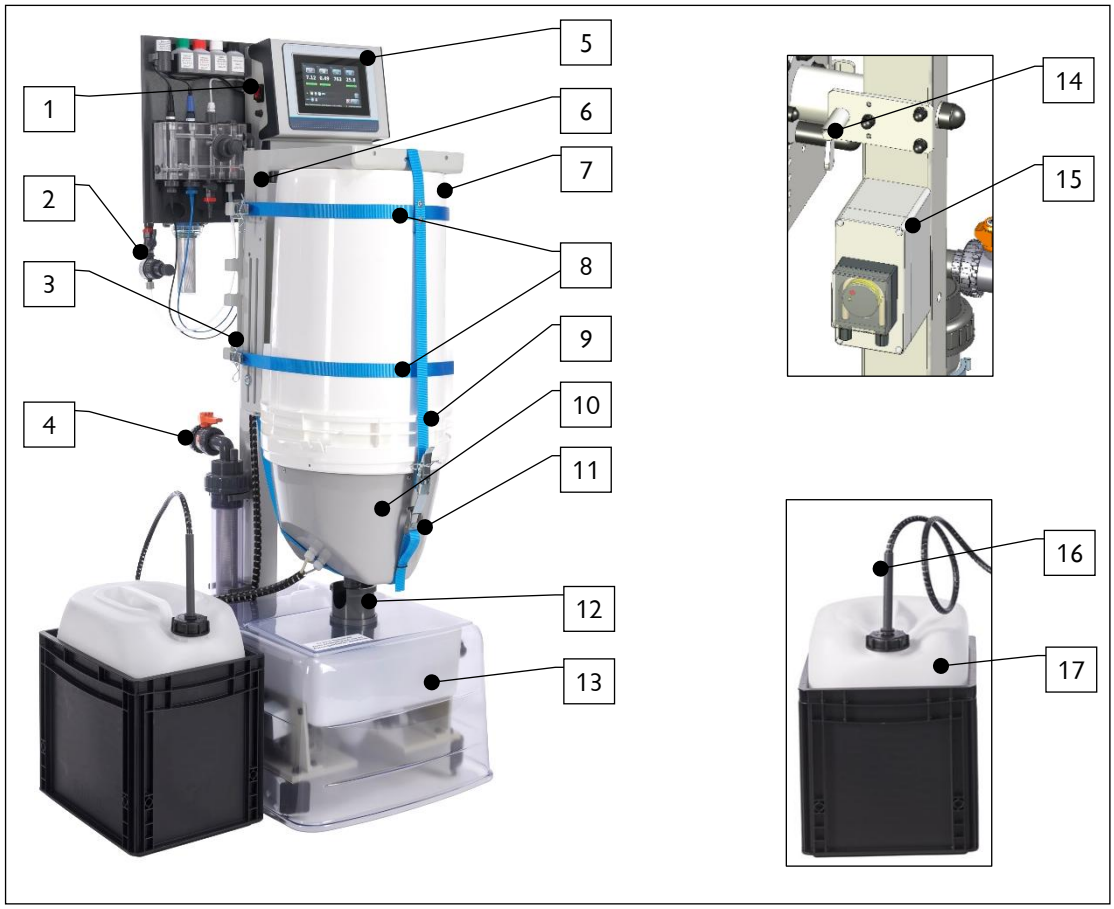

1. Main switch
2. Pressure retention valve
3. Upright column with drum holder
4. Inlet ball valve
5. Control unit
   a) for GRANUDOS **CPR Touch XL with measuring cell block**, see separate operating instructions "*CPR-Touch XL Measuring and Control Unit" No.* ***BA MR 001)*** (with measuring cell block)
   b) for GRANUDOS **Touch without measuring cell block**, see separate operating instructions, "*GRANUDOS Touch* Control Unit" No. **BA SW 010**)
   c) for GRANUDOS **S5 without measuring cell block**, see separate operating instructions, "*GRANUDOS S5* Control Unit" No. **BA SW 014**)
6. Identification plate (on the right side of the upright pipe, covered)
7. Chlorine drum
8. Tension bands
9. Safety belt
10. Chlorine dosing unit
11. Clamping lever for the safety belt
12. Dust protection
13. Dissolving and flushing unit for chlorine granulate with cover
14. Spring bolt for the turning device (on the right side of the upright pipe, covered)
15. Dosing pump for pH reducer (on the right side of the upright pipe, covered)
16. Suction lance for pH reducer
17. Canister for pH reducer with collecting basin
18. Dust extraction (not illustrated), *see Figure 11, Dust extraction, page 18*

Replace the drum:

a) Push the dust protection pipe (12) downward.
b) Loosen the spring bolt (14) of the drum holder and rotate the turning device with the empty drum clockwise from the dosing position upward; while doing so, keep the dosing pipe covered with a finger to prevent any granulate from escaping. Relock the turning device. (This point does not apply during the initial commissioning.)
c) Loosen the safety belt (9) and the tension bands (8). Remove the empty drum from the turning device. Unscrew the dosing hopper with a counter-clockwise turn and place it next to the dosing device. (This point does not apply during the initial commissioning.)
d) Unscrew the lid from the new drum and remove the measuring cup, if present.
e) Place and screw the dosing hopper on the drum so that the drum's recessed grips are oriented laterally and the control cable is on the right side.



ATTENTION!

Ensure that the dosing hopper correctly engages with the drum's thread without jamming and that a proper connection exists after it has been screwed in.

f) Place the new drum on the turning device so that it is leaning against the posterior tracks and the lower spacers and the retaining bracket engages with the drum's cross ribs.
g) Next, pull the tension bands around the drum and close the tension lever. The tension lever must be tightly closed; however, do not use excessive force when turning the tension lever. The length of the tension band must be adjusted correspondingly at the screw ends.
h) Insert the safety pins in the tension levers!
i) Pull the safety belt's carrier belt (69) over the heating nozzle from behind so that the bolt's clamp lock (71) is located on the front of the hopper. Insert the tension belt's (74) clamping lever (72) in the clamp lock (71), pull it tight and secure with the safety pin. If the tension belt is not tight, adjust the length of the adjusting belt (70) correspondingly. Insert the safety pin (73)!

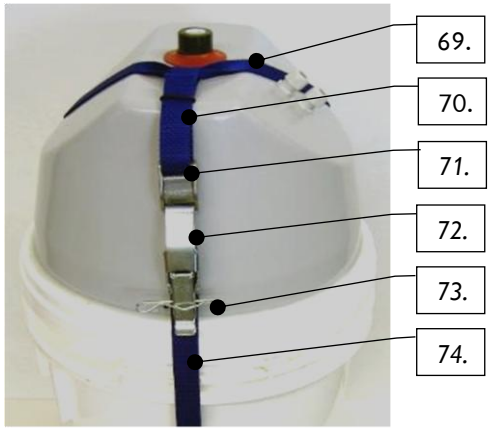

Figure 28, Dosing head Attachment



ATTENTION!

Ensure that all safety pins have been inserted!

j) Unlock the drum holder by turning the spring bolt *(14)* upward. Cover the dosing pipe with a finger and slowly turn the drum counter-clockwise in the dosing position. Lock the drum holder by turning the tension bolt downward. Ensure that the control cable does not get entangled.
k) Orient the dust protection pipe in the flushing tub lid so that any potential air current does not blow away the fine chlorine dust. (Distance of the protection pipe's upper edge from the dosing hopper approx. 1-2 cm). Minimise air draft - close doors!
l) Press the Chlorine counter  button on the display. This updates the chlorine level on the display. (only for CPR Touch and Touch)

5.2.3.2 Attaching with drum holder FH3 (option)

a) Push the dust protection pipe (12) downward.
b) Loosen the spring bolt (14) of the drum holder. Rotate the turning device with the empty drum clockwise upward; while doing so, keep the dosing pipe covered with a finger to prevent any granulate from escaping. Relock the turning device. (This paragraph does not apply during the initial commissioning.)
c) Loosen the two vertical retaining straps (81) on the lock (79) and unhook.
d) Open and unhook the two horizontal tension bands (8) on the right-hand side (this paragraph does not apply during the initial commissioning.
e) To open the two drum support arms (76), open the clamping lever (82) and turn the two drum support arms outwards.
f) Remove the empty drum (77) from the turning device. Unscrew the dosing hopper (75) and place it sideways on the floor (this paragraph does not apply during the initial commissioning).
g) Unscrew the lid from the new drum and **remove the measuring cup**, if present.
h) Place and screw the dosing hopper on the drum so that the drum's recessed grips are oriented laterally and the control cable is pointing to the right.
i) Lift the full drum with the dosing hopper onto the turning device.

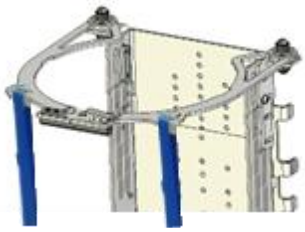

Drum holder FH3, closed

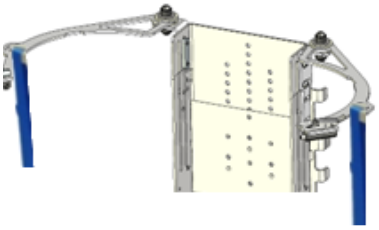

Drum holder FH3, open



Drum holder FH3 with drum, open



ATTENTION!
Watch the dosing hopper's control cable to prevent the protective pipe from being bent!

j) Next, pull the tension bands (8) around the drum and close the tension levers. The tension levers must be tightly closed; however, do not use excessive force when turning the tension lever. The length of the tension band must be adjusted correspondingly at the screw ends.
k) Slide the two drum support arms (76) together and lock them with the clamping lever (82). Hook in and tighten the vertical retaining straps (81). Secure all 3 clamping levers with safety pins (79).



ATTENTION!
Ensure that all safety pins have been inserted!

l) Loosen the spring bolt (14) of the drum holder. Rotate the turning device with the drum counter-clockwise downward into the dosing position. Once again, cover the dosing pipe with a finger. Lock the turning device with the spring bolt.
m) Orient the dust protection pipe (12) so that any potential air current does not blow away the fine chlorine dust. (Distance of the protection pipe's upper edge from the dosing hopper approx. 1-2 cm).
n) Press the Chlorine counter  button on the display. This updates the chlorine level on the display. (only for CPR Touch and Touch)

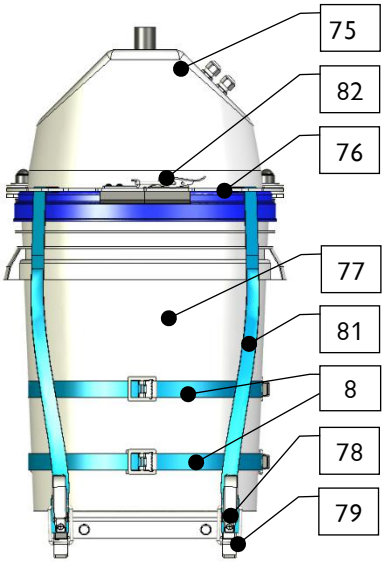

Figure 29, Drum holder Type FH 3

5.2.4 Venting the booster pump and the piping to the GRANUDOS-VARIO

The pump and the piping must be carefully vented prior to each commissioning of the GRANUDOS-VARIO. To prevent the booster pump from running dry, pay attention to the following during installation and commissioning:

a) Manually check if the circulation pump can be turned with ease. To do so, you can check the smooth running of the shaft at the fan propeller in the back, using a screwdriver. If the shaft does not turn smoothly, the mechanical seal is clotted. Try to loosen it by turning it back and forth. If this does not solve the problem, the pump must be deinstalled and disassembled to loosen the mechanical seal.



ATTENTION!

If the pump is switched on with a blocked mechanical seal, the pump's failure is inevitable.

b) During commissioning, open the ball valves at the water removal point and the dosing point, then open the inlet valve at the dirt filter d75 and wait until the flushing tub is half full. This ensures that water has flowed through the pump and the pump has been vented. Then open the shut-off valve upstream of the cyclone. Only now switch on the GRANUDOS at the main switch (14).

c) The piping to the GRANUDOS must be carefully vented. To do so, observe the dirt filter d75. If the water level in the filter drops sharply when the pump is switched on, switch off the GRANUDOS, open the venting screw at the top of the filter (option: filter vent 1/4" with ball valve and hose) and allow water to run into the filter; then switch the machine back on. If necessary, repeat the process several times until the filter remains full; a few air bubbles in the upper filter area are inconsequential.



ATTENTION!

If the pump draws air while in operation or during unmonitored activation, the pump's mechanical seal will run dry, overheat and start to leak. This can be the case with an installation above the swimming pool level, when draining the supply line or when turning off the filter system. In this installation scenario, pay attention to the following installation information.

a) Install a free-flowing non-return valve in the supply line to the dosing device.

b) Install a spring-loaded non-return valve in the dosing line to the clean water piping to avoid the flushing tub from draining when the system is turned off. Corresponding non-return valves are available.

c) If it is intended or necessary to prevent an overflow when the device is turned off or in case of a fault, install a solenoid valve 3/4" in the inlet and a non-return valve d25 or d32 in the drain. Check for minor pressure loss! For safe operation, a supply pressure of more than 0.4 barg is therefore required!

d) A venting valve that can be attached to the venting connection is optionally available. Here, the escaping water is conducted back into the dissolving basin.

5.2.5 Venting the dust extraction pump (option)

CAUTION!

Water may splash out when venting the pump!

Personal safety equipment must be put on before starting work with chemicals: Protective gloves, apron, face protection, foot protection.

Description

In order for the dust extraction to function properly, the dust extraction's circulation pump must be vented.

Procedure

a) **Switch off** the device at the **main switch**.
b) Fill the flushing tub with water up to the mid-filling level (if this has not been done yet). This fills the dust extraction pump with water, preventing a dry run!
c) Prepare the *Dust extraction* pump *(51)* for venting; to do so, slightly loosen a screw connection on the pressure side
d) **Switch on** the device at the **main switch**
INFO! Immediately after switching on, the flushing system initiates the flushing programme (dust extraction pump runs, solenoid valve opens)
e) Vent the dust extraction pump and retighten the hose connection

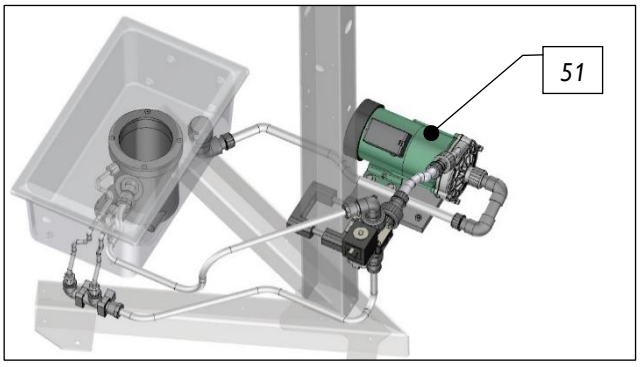

Figure 30, Dust extraction

Tipp

Tip!
To test the flushing (without changing parameters), switch the GRANUDOS OFF and ON again at the main switch. The flushing then runs according to the set parameters (ex works: 10 s flushing, 1 h pause)

GRANUDOS standby operation, in this operation mode, the flushing also works according to the set parameters.

5.2.6 Setting the water flow in the dissolving unit

The further proceedings are only possible when the device is turned on.
Turn the device on, using the main switch on the left side of the control unit. The booster pump starts up. When the device is turned on, the pump is in permanent operation, except when the pressure switch (41) or the min level switch (38) respond.

The hole washer in the pipe union (36) behind the injector (42) adjusts the injector's suction performance to the pressure conditions. If the water level in the flushing tub (46) drops during commissioning, a washer with a smaller drill hole must be inserted in the pipe union.

If the water level rises, or if the flow switch's (47) switch body is not clearly pushed upward, a washer with a larger drill hole is required, or the washer must be removed entirely.
A washer with 6mm is installed ex works; washers with 5.5mm and 7mm are available in the enclosed spare parts bag.

Overview dissolving unit

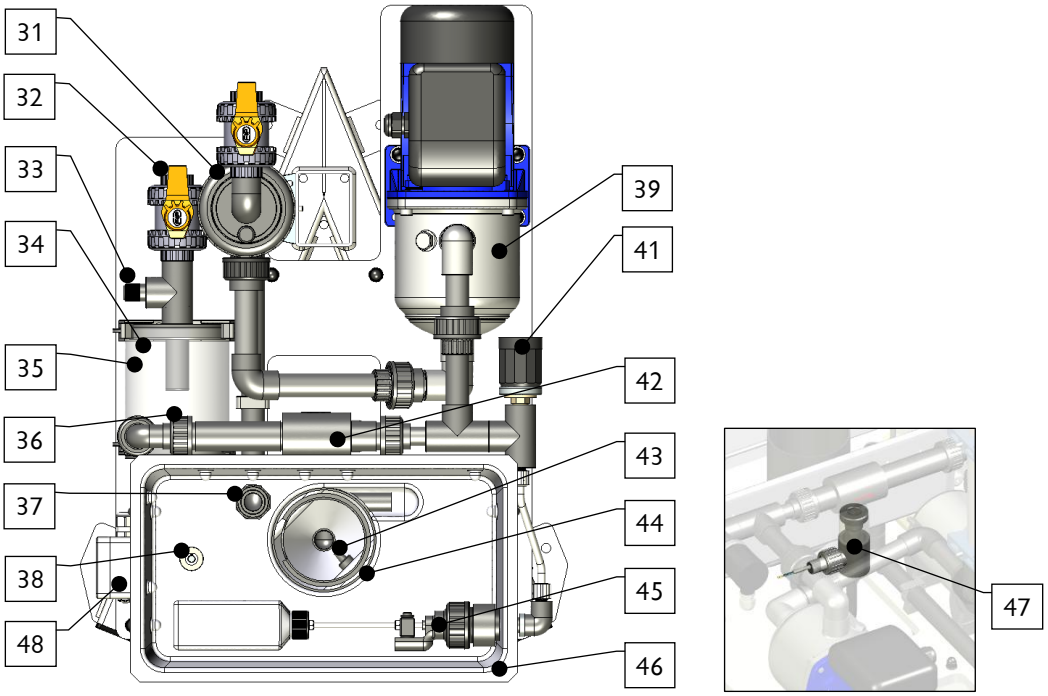

Figure 31, Dissolving unit from above

The dissolving unit consists of:

31. Dirt filter d75 mm
32. Outflow ball valve for booster water
33. Connection for manometer
34. No chlorine switch / sensor on the cyclone (option; not illustrated)
35. Dissolving and mixing cyclone
36. Pipe union with hole washer
37. Flushing tub overflow
38. Level switch min./max. Flushing tub
39. Booster pump (various designs)
40. —
41. Pressure switch
42. Injector
43. Dosing valve for pH reducer
44. Flushing pipe
45. Float control valve in the flushing tub inlet
46. Flushing tub
47. Flow switch for flushing tub
48. Connection socket for the switches

Setting the pressure switch (41)

The installed pressure switch (41) records the booster pump's (39) effective pressure. In the event of air inlet or a pressure drop in the water supply, the GRANUDOS dosing device switches off when the value falls below the switching pressure. In addition to the electric locking, this ensures that:

- The dosing is turned off if the booster pump does not transport enough water.
- The booster pump is not exposed to the risk of cavitation.

To set the switching point, the dosing device must operate in automatic mode. Remove the lid from the pressure switch, turn the adjustment knob 0.25 bar to the right and wait for 6 seconds. If the dosing device continues to run, repeat the process until the dosing device stops and the  "Pressure too low" fault indication appears. The GRANUDOS dosing device stops. Now turn the adjustment know 0.25 bar to the left and acknowledge the alarm message. The dosing device will start up again. Now, the dosing device will throw a fault at a pressure drop of 0.25 bar.
A switching point of 1.5 barg is preset ex works.

5.2.7 Setting the water level in the flushing tub

The water level in the flushing tub can be changed by screwing the float at the float control valve(45) in or out. A higher level is achieved by unscrewing the float, a lower level by screwing the float in. One revolution corresponds to approx. 1 cm. Adjust the float in the flushing tub so that the water level corresponds approximately with the centre of the flushing tub.



Tip!

This concludes the commissioning of the dosing unit. For further information on commissioning, operation and settings of the control unit, please refer to the Operating Instructions for the control unit:

- for GRANUDOS **CPR Touch XL**, see OI "CPR-Touch XL Measuring and Control Unit" No. **BA MR 001**.
- for GRANUDOS **Touch**, see OI "GRANUDOS Touch Control Unit" **No. BA SW 010**.
- for GRANUDOS **S5**, see OI "GRANUDOS S5 Control Unit" No. **BA SW 014**.

6 Operation / Use

The nationally applicable accident prevention regulations in Germany: Operation of swimming pools BGR/GUV-R 108 must be observed.

6.1 General

For operating and setting the dosing device, continue reading the Operating Instructions for the control unit:

- "**CPR-Touch XL** Measuring and Control Unit" No.**BA MR 001**,
- "GRANUDOS **Touch** Control Unit" No. **BA SW 010**,
- "GRANUDOS **S5** Control Unit" No. **BA SW 014**.

6.2 Replenishing consumables



PROTECTIVE CLOTHING!

Personal safety equipment must be worn when handling chemicals: Tight-sealing goggles, respiratory protection, protective gloves, apron, face protection, boots
Pay attention to the safety data sheets for each chemical.

- Replenish acid
  Replacing the acid canister, see *Chapter 5.2.2,* Connecting the acid canister.
  Pay attention to the specifications for each chemical listed in the safety data sheets!

- Replenish chlorine granulate
  Replacing the chlorine granulate, see *Chapter 5.2.3, Attaching/changing the drum.*

7 Maintenance, care, fault

7.1 Device maintenance



DANGER FROM ELECTRICAL VOLTAGE!

Before any electrical work is carried out, the device must be disconnected from the power supply and secured against being reactivated!

All electrical work on the device must only be carried out by trained specialists in accordance with the applicable safety regulations!

During all repair and maintenance work, the valves must be closed and the lines depressurised to prevent injury.

We recommend that you assign a specialist firm to carry out regular maintenance.



Tip!

The maintenance work required for trouble-free operation is listed in the maintenance protocol in *Chapter 9.5*. These tasks should be documented in the maintenance protocol as proof of work.

7.1.1 Cleaning the dirt filter

When working on lines that carry water, always close the inlet and outlet valves! A clean dirt filter is important for proper functioning. A dirty filter can lead to cavitation in the booster pump, thereby damaging the pump.

To clean the filter, loosen the upper and lower union nut at the filter and remove the filter from its bracket. Pull out the filter insert under running water. Clean the filter hood and the filter insert under running water.

7.1.2 Replacing the dosing screw and the dust gasket



ATTENTION!

The protective cover must be removed prior to any work described in Chapter 7.1.2!

Removal / installation of the protective cover

1. Push the dust protection pipe (12) downward.
2. Loosen the spring bolt (14) of the drum holder and rotate the turning device with the drum clockwise from the dosing position upward; while doing so, keep the dosing pipe covered with a finger to prevent any granulate from escaping. Relock the turning device.
3. Loosen the *Safety* belt *(9)* .
4. Loosen the attachment screws of the protective cover, remove the cover – pull the cables slightly inward to ensure improved cover mobility
5. To install the protective cover, follow the procedure in reverse sequence

Replacing the dosing screw

When only replacing the dosing screw, the seal in the dust protection cover should also be renewed. Sealing washers made of EPDM and felt are included in the scope of delivery.

PROTECTIVE CLOTHING!

Personal safety equipment must be put on prior to starting the work: Tight-sealing protective goggles, respiratory protection, protective gloves, apron, face protection, boots.

Pay attention to the safety data sheets for each chemical.

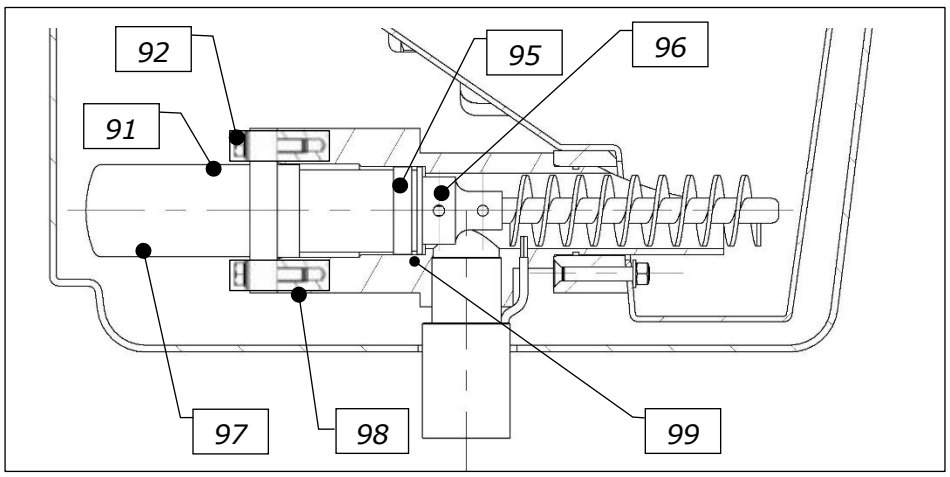

Figure 32, Dosing motor with dosing screw

91. Protective cover for motor
92. Screw M5x20
93. Diaphragm (covered)
94. Felt washer (covered)
95. Dust cover
96. Grub screw
97. Dosing motor
98. Motor bracket
99. O-ring

Required tools for replacing the dosing screw or the dosing motor

a) Phillips screwdriver PZ2 to loosen the screws on the cover and control unit
b) Flat-head screwdriver 2mm to loosen the cable clamps,
c) Wrench 8mm to loosen the dosing motor
d) Measuring device (multimeter) for measuring the voltage
e) Small knife or screwdriver to clean the grub screw
f) Allen wrench 2.5mm for grub screw on the dosing screw

7.1.2.1 Removal of the dosing motor and the dosing screw

a) Open the connection socket at the dosing hopper if the motor is to be uninstalled.
b) Remove the protective caps from the attachment screws M5x20 *(92)* and unscrew the screws using a wrench SW 8,
c) pull the motor with the dosing screw from the bracket – to do so, hold a flat collecting basin under the motor bracket to avoid scattering any chlorine granulate. Clean the inside of the motor bracket and remove any scattered chlorine grains.
d) Clean the screw – Is the chlorine granulate inside the screw heavily solidified or does the granulate easily scatter from the screw when this is pulled out?
e) If the granulate is solidified, it may be too moist or have an excessive dust content. It is also possible that the screw is too worn and the granulate is no longer transported properly

7.1.2.2 Maintenance of the dosing motor

a) Disconnect the motor cable at the hopper and pull the cable from the grommet.
b) Use a small screwdriver, knife, etc., to scrape the putty from the thread hole of the grub screw *(96)* on the dosing screw's PVC collar.
c) Loosen the grub screw with an Allen wrench SW 2.5 and pull the dosing screw from the shaft.
d) Pull the dust cover from the dosing motor and remove the old sealing washers.
e) Spread silicon grease on both sides of the felt washer.
f) Fill the bearing indentations at the dosing motor with silicon grease.

g) First push the sealing washer EPDM (rubber) on the shaft, followed by the greased felt washer, and firmly reattach the dust cover.
h) Remove the old O-ring from the dust cover's groove, insert a new O-ring, apply approx. 2 layers of Teflon tape.
i) Spread silicon grease on the front surfaces of the dosing motor/PVC dust cover and the dosing screw.
j) Push the dosing screw on the shaft so that the attachment screw is located on the flat part of the motor shaft.
k) Press the dosing screw against the motor and fasten the threaded pin.



ATTENTION!

Do not fasten too tightly, as this may strip the PVC thread.

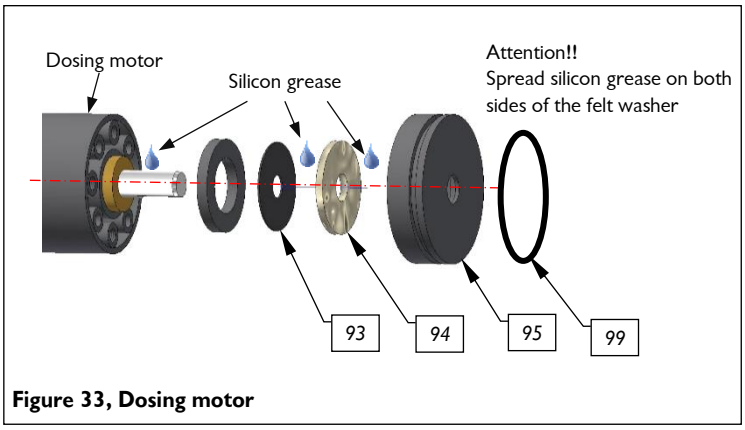

Figure 33, Dosing motor

93. Diaphragm
94. Felt washer
95. Dust cover
99. O-ring

l) Thoroughly close the thread bore with putty.
m) Insert cable in the connection socket – apply a small amount of silicon grease, if needed, connect the cables: white on white, brown on brown
n) Test the dosing motor's functioning.
o) Push the dosing motor into the - cleaned - motor bracket and evenly screw tight with the new screws M5x20, attach the protective covers.



ATTENTION!

Without putty, the screw will heavily corrode within a short time and can no longer be loosened. If the dosing screw or the motor must be replaced again at a later time, both parts would have to be replaced together!

7.1.2.3 Replacing only the dosing motor

a) Entirely unscrew the threaded pin from the old dosing screw and insert a new threaded pin.
b) Clean the front surface of the old dosing screw's adapter and cover it with silicon grease.
c) Open the connection socket at the dosing hopper, loosen the connectors of the dosing motor cable (brown - white), pull in a new motor cable and clamp tight: brown on brown, white on white.
d) Push the dosing screw on the shaft so that the threaded pin is located on the flat part of the motor shaft, press firmly against motor and tighten the threaded pin.
e) Push the motor with the dosing screw back into the cleaned bracket, tighten the flange – not too tight – and push the protective caps on the screw heads.
f) Place a new O-ring on the dosing screw's guide pipe, wrap with Teflon tape (approx. 3 layers), grease and push the dosing unit into the bracket.

7.1.2.4 Replacing only the dosing screw

a) Pull the dust cover from the dosing motor, remove the old gasket set from the dust cover, thoroughly clean the dosing motor's shaft, apply fresh silicon grease to the ball bearing, press the sealing washer (diaphragm) 19/4x0.5 EPDM *(93)* onto the shaft. Thoroughly grease and attach the felt washer *(94)*, push the dust cover over it, loosen the old Teflon tape and apply approx. 3 layers of new tape.
b) Apply a layer of silicon grease to the front surface of the new dosing screw's adapter.
c) Push the dosing screw on the shaft so that the threaded pin is located on the flat part of the motor shaft, press firmly against motor and tighten the threaded pin.
d) Push the motor with dosing screw back into the cleaned (!) bracket, tighten the flange – not too tight – and push the protective covers on the screw heads.
e) Perform dosing capacity determination (only for Touch control unit), see See OI "for "Touch Control Unit", No.: **BA SW 010.**

7.1.3 Injector with flow switch

Overview flow switch:

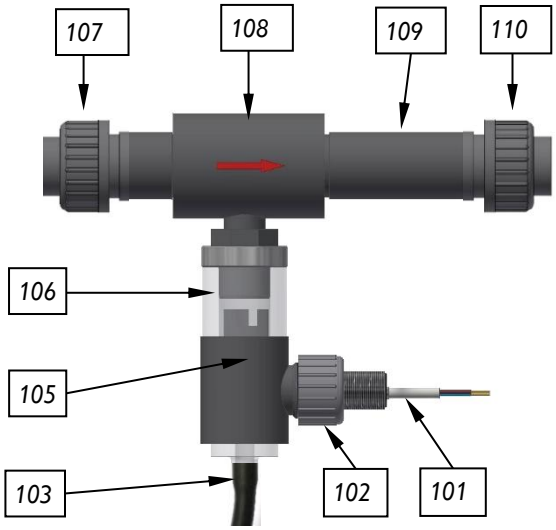

101. Flow switch with LED
102. Union nut for flow switch
103. Viton hose to the flushing tub
104. —
105. Switch body (in the suction pipe)
106. Suction pipe
107. Union nut for injector inlet
108. Injector
109. Injector nozzle with installed flow limiter
110. Union nut; and injector outlet

Figure 34, Flow switch d 40

Replace the washer:

Loosen the union nuts *(107+110)* and remove the injector. The nozzle is sealed with an O-ring at the end of the injector nozzle's *(109)* inner thread. Lever out the disc with a small screwdriver and replace it with a new one, or leave the washer uninstalled. As needed.

7.1.4 Maintenance and setting of the float control valve for the flushing tub inlet

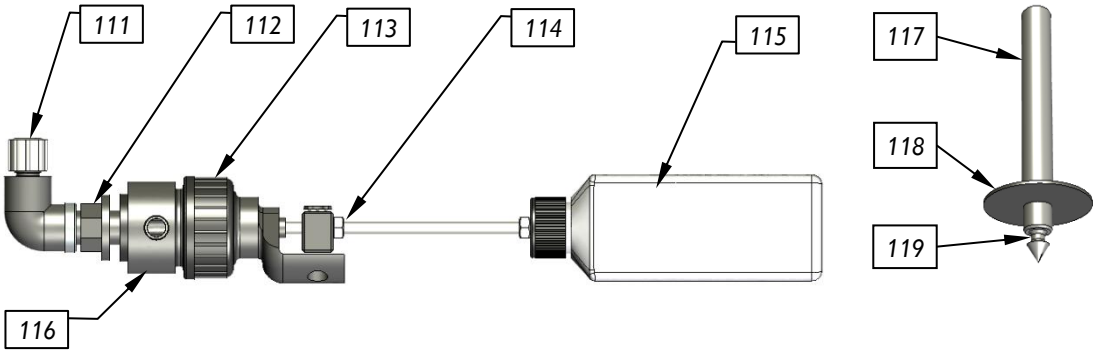

Figure 35, Complete float control valve and ... tappet for floating valve

Overview of complete floating valve

111. Hose connector for flushing water hose 6x1mm with O-ring
112. 3/8" nut with seal (not illustrated)
113. Union nut for float assembly group
114. Adjustment screw for water level
115. Float 250ml
116. Floating valve body

Overview of floating valve tappet

117. Membrane piston
118. Sealing membrane
119. Valve cone with O-ring seal

Replace the sealing membrane:

a) Loosen the union nut *(113)* and remove the upper part of the floating valve.
b) Remove the tappet assembly group *(117-119)*, pull the valve cone from the membrane piston *(117)* and install a new sealing membrane *(118)* on the valve cone.
c) Replace the O-ring on the valve cone *(119)* as well.
d) Reinstall in the reverse sequence.
e) Reset the water level in the flushing tub. See *Chapter 5.2.7.*

7.1.5 Replacing and setting the Chlorine empty switch at the dosing hopper

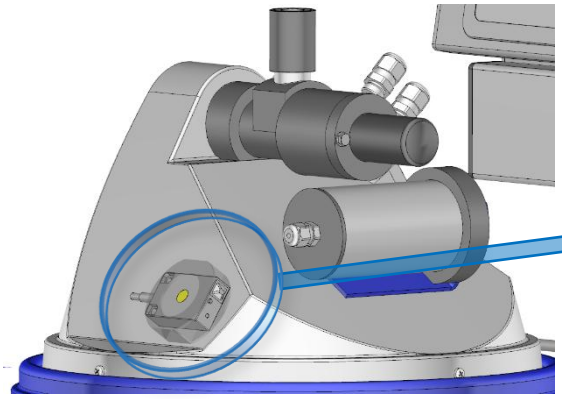

Figure 36, Dosing hopper with empty switch

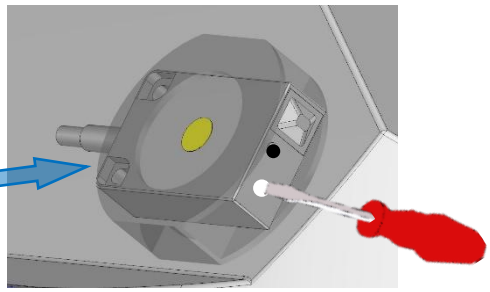

Figure 37, Empty switch

At the GRANUDOS-VARIO, the empty switch can be accessed after removing the protective cover. The small adjustment screw with the switch LED can be seen on top of the empty switch's narrow side. When the drum is empty or the dosing hopper with the drum has been turned upward, this LED must **not** be illuminated; the display must show the Disinfection level.

If the switch LED is illuminated, turn the adjustment screw to the left until the LED light goes out. The Disinfection level fault display at the control unit reacts with a 6-second delay. It the switch does not react to the adjustment potentiometer or if the adjustment screw has been destroyed, a new switch must be installed.

Adjust the empty switch (drum rotated upward)

- Turn the adjustment screw to the right until the switch LED is illuminated,
- then carefully turn it back, until the switch LED goes out, followed by an additional 10° turn.
- The Disinfection level fault is displayed at the control unit. After rotating a drum that is **not empty** into the dosing position, the fault display at the control unit goes out.

Replace empty switch:

a) The switch is pushed into a bracket.
b) Open the connection socket and loosen the 3 switch wires; pull out the cable.
c) Push out the old switch.
d) Push the new switch into the bracket.
e) Insert the cable in the connection socket and clamp on according to the wiring diagram.
f) Close the terminal housing and fill the screw heads with grease to prevent any corrosion.
g) Adjust the switch – see previous paragraph

7.1.6 Replacing the dosing pump's dosing hose

For additional procedure, see *Chapter 5.2.1, Installation of peristaltic* pump, roller carrier.

7.1.7 Justage of the "No chlorine switch" on the dissolving cyclone (only for version with buffer tank)



Tip!
The No chlorine switch is preset ex works and must only be recalibrated in case of a malfunction. The LED on the No chlorine switch and the adjustment screw become visible when the protective cap of the No chlorine switch (*34*) is removed. Without chlorine *in the Dissolving and mixing* cyclone *(35)*, the LED on the No chlorine switch should not be illuminated!
The justage is only possible when "Buffer tank filling" is activated.

The No chlorine switch is installed *at the Dissolving and mixing* cyclone *(35)* . After the start of the 2nd dosing cycle, within 8 seconds the red LED at the No chlorine switch must be continuously illuminated for at least 2 seconds due to registering the rotating chlorine. Otherwise, the fault indication  is displayed and the GRANUDOS switches off.

Justage:

a) Deactivate the alarm relay and/or start the GRANUDOS:

b) Then switch off the dosing DOS; the GRANUDOS now only transports water into the buffer tank.
c) Wait until no more granulate can be seen in the cyclone.
d) Turn the yellow adjustment screw at the sensor in a clockwise direction until the red LED on the sensor is illuminated.
e) Then slowly turn it back until the LED goes out again; at this point, stop immediately.
f) The sensor is now recalibrated.

g) Switch on the dosing DOS.

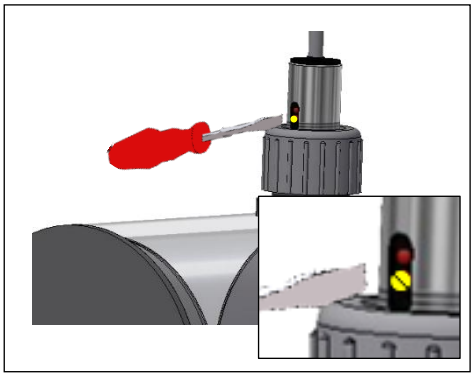

Figure 38, No chlorine switch

7.1.8 Cleaning the dust extraction (option)

CAUTION!

Due to the aggressive chlorine dust, personal safety equipment must be put on prior to starting the work: Protective gloves, apron, face protection.

Tipp

Tip!

Cleaning: Once the flushing action abates, the **flushing ring** can be removed, disassembled and cleaned. Ensure that the original screws are reused, since they are made of a chloride-resistant material. Using other materials may cause the screws to corrode. This results in rust-coloured stains.

Overview dust extraction

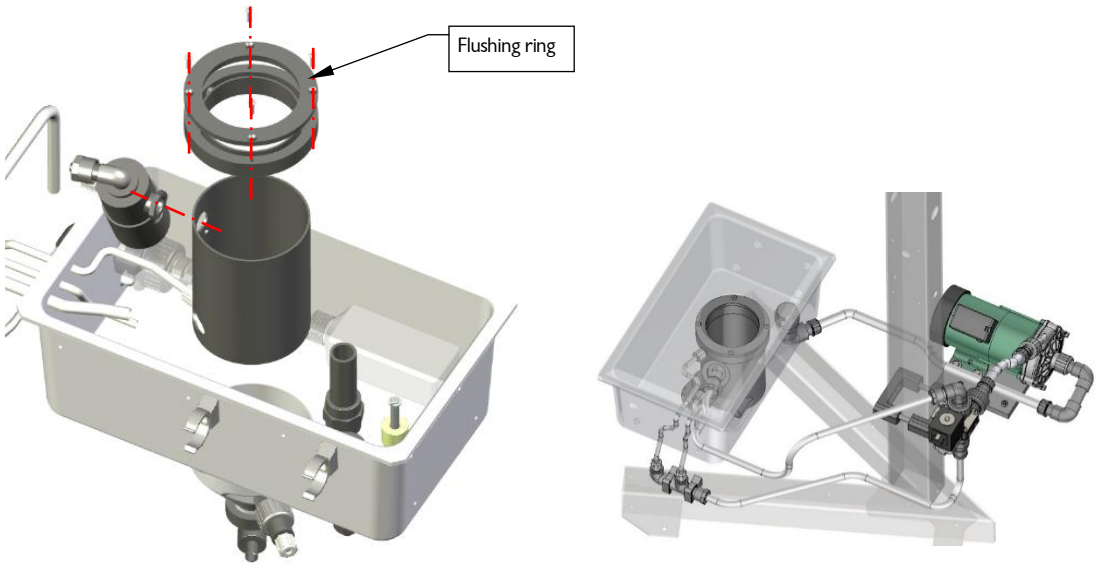

Figure 39, Dust extraction

Procedure

a) Remove, disassemble and clean the **flushing ring** (see exploded drawing).
b) Then reassemble the flushing ring. Ensure that the **original screws are used again** during reassembly, since they are made of chloride-resistant material. Using other materials may cause the screws to corrode.



Tip!

Faults are indicated in the display in the IN and OUT list by the appropriate symbol. See also separate operating instructions:

- for GRANUDOS **CPR Touch XL**, "*CPR-Touch XL* Measuring and Control Unit" *No.* ***BA MR 001*** (with measuring cell block), in *Chapter 7.3.*
- for GRANUDOS **Touch**, "*GRANUDOS Touch* Control Unit" No. ***BA SW 010***, in *Chapter 7.3.*
- for GRANUDOS **S5**, "*GRANUDOS S5* Control Unit" No. ***BA SW 014***, in *Chapter 7.3.*

The flushing tub must not overflow when the GRANUDOS is shut down. Should this occur, one of the following elements is leaking:

- Floating valve → Replace diaphragm
- Switch body in the suction pipe → Remove foreign objects
- Pressure retention valve in the measuring water line (in the inlet line to the measuring cell) → Replace valve



Tip!

Encrustations of chlorine granulate at the dosing hopper can lead to malfunctions. Clean the dosing hopper according to the maintenance protocol.

8 Decommissioning – Storage – Disposal

8.1 General

In the event of decommissioning and risk of frost, the devices must be emptied completely and protected against frost!

8.2 Decommissioning of the GRANUDOS-VARIO dosing device

1. Remove the suction lance from the dosing canister and place it in a bucket filled with clean water.
2. Thoroughly remove any remnants of calcium hypochlorite in the device and allow the system to run for an additional 10 minutes.
3. Stop the dosing via the 

button **(type CPR Touch XL + Touch)** or via the arrow keys **(type S5)** (Dosing OFF).
4. Remove the chlorine drum and close it securely.
5. Empty and thoroughly clean the dosing hopper.
6. Disassemble the dosing motor with the dosing screw from the dosing hopper, thoroughly clean the dosing motor with the dosing screw and store it in a dry place. – no chlorine grains must be left on the ground!
7. Remove the roller carrier from the peristaltic pump in order to relieve the dosing hose.
8. Thoroughly clean all parts of the GRANUDOS-VARIO.
9. If there is a risk of frost, drain all of the water-conveying parts; in particular, do not forget the suction pipe and the pump.
10. Deactivate the dosing device at the main switch. – Or, in very cold and moist rooms, keep the dosing device activated to prevent potential condensation in the control housing.

    Also pay attention to *Chapter 8.3*



ATTENTION!

During recommissioning, it is essential that you follow the instructions in the "Commissioning" chapter and implement the points contained in the commissioning protocol.

8.3 Buffer tank (option)

Empty and clean the buffer tank.
Suck the sediment deposits from the buffer tank, if necessary. Any tightly adhering deposits can be removed with diluted hydrochloric acid.

8.4 Disposal of used parts and operating materials

Thoroughly clean any removed, contaminated parts first and then dispose of them, or have them recycled, in accordance with the regulations applicable at the operating location.
Pay attention to the relevant notices on the packaging for the operating materials. In case of doubt, information may be obtained from the authorities responsible for disposal at your location.
If this is not possible, dispose of the components/materials as hazardous waste.

9 Documents

9.1 Declaration of conformity

WDT Werner Dosiertechnik GmbH & Co. KG
Hettlinger Straße 17 | D-86637 Wertingen
Tel. 0049 8272 98697-0 | Fax 0049 8272 98697-19
info@werner-dosiertechnik.de | www.werner-dosiertechnik.de

Werner Dosiertechnik

EG-Konformitätserklärung
EC declaration of conformity
Déclaration de conformité UE

im Sinne der EG-Maschinenrichtlinie 2006/42/EG, Anhang II 1.A
as defined in the ECMachinery Directive 2006/42 / EC, Annex II, Part 1A
selon la directive européenne machines 2006/42 / CE, annexe II 1.A

Hersteller WDT - Werner Dosiertechnik GmbH & Co. KG
Manufacturer Hettlinger Str. 17
Fabricant 86637 Wertingen-Geratshofen

Beschreibung und Identifikation des Produktes:
Description and identification of the product:
Description et identification du produit :

Typenbezeichnung:	Art:
• GRANUDOS 10, GRANUDOS 10-CPR Touch, GRANUDOS 10-Touch, GRANUDOS 10-S5 • GRANUDOS 15, GRANUDOS 15-PC, GRANUDOS 15-S5 • GRANUDOS 45/100-PB, GRANUDOS 45/100-S4, GRANUDOS 45/100 Plus-V70 Touch, GRANUDOS 45/100-CPR Touch, GRANUDOS 45/100-Touch, GRANUDOS 45/100-S5, GRANUDOS 45/100 Plus-V80 Touch • GRANUDOS FB • GRANUDOS Flex, GRANUDOS Flex-CPR Touch, GRANUDOS Flex-Touch, GRANUDOS Flex-S5 • GRANUDOS-VARIO-PB, GRANUDOS-VARIO-CPR Touch, GRANUDOS-VARIO-Touch, GRANUDOS-VARIO-S5, GRANUDOS-VARIO Plus-V80 Touch	Maschine

Funktion: Das Dosiersystem dient zur Desinfektion von Schwimmbadwasser mit Calciumhypochloridgranulat.
Function: The dosing system is intended for swimming pool disinfection using calcium hypochlorite granules
Fonction: Le système de dosage est utilisé pour la désinfection des piscines avec des granulés d'hypochlorite de calcium

Es wird ausdrücklich erklärt, dass das Produkt allen einschlägigen Bestimmungen der folgenden EG-Richtlinien entspricht:
It is expressly stated that the product complies with all relevant provisions of the following EC directives
Il est explicitement dit que le produit est conforme à toutes les dispositions pertinentes des directives CE suivantes :

2006/42/EG RICHTLINIE 2006/42/EG DES EUROPÄISCHEN PARLAMENTS UND DES RATES vom 17. Mai 2006 über Maschinen und zur Änderung der Richtlinie 95/16/EG (Neufassung)

Die folgenden harmonisierten Normen nach Artikel 7 (2) wurden angewandt:
The following harmonized standards as defined in Article 7 (2) were applied:
Les normes harmonisées suivantes selon l'article 7 (2) ont été appliquées :

EN ISO 12100:2010 Sicherheit von Maschinen - Allgemeine Gestaltungsleitsätze - Risikobeurteilung und Risikominderung
EN 60204-1:2018 Sicherheit von Maschinen – Elektrische Ausrüstung von Maschinen – Teil 1: Allgemeine Anforderungen
EN ISO 14120:2015 Anforderungen an Gestaltung und Bau von feststehenden und beweglich trennenden Schutzeinrichtungen

Die in der Gemeinschaft ansässige Person, die für die Zusammenstellung der technischen Unterlagen bevollmächtigt ist:
The designated person who is authorized to draw up the technical documentation:
La personne établie dans la communauté qui est autorisée à constituer le dossier technique:

Name: Werner Dosiertechnik GmbH & Co KG
Straße/Nr.: Hettlinger Straße 17
PLZ Stadt: 86637 Wertingen

WERNER Dosiertechnik GmbH & Co.KG 86637 Wertingen-Geratshofen Tel. 08272 98697-0 · Fax 98697-19

Wertingen, 24.09.2025
Ort/Citiy/Place, Datum/Date

Unterschrift/signature Jochen Rieger, Director

CE SW 001-03 Konformitatserklärung GRANUDOS.docx

9.2 Wiring diagrams

The wiring diagrams for the standard version of the devices can be found in the respective operating instructions for the control unit:

- for GRANUDOS **CPR Touch XL**,"*CPR-Touch XL* Measuring and Control Unit" No. **BA MR 001** in *Chapter 9.2.*
- for GRANUDOS **Touch**, "*GRANUDOS Touch* Control Unit" No. **BA SW 010**, in *Chapter 9.2.*
- for GRANUDOS **S5**, "*GRANUDOS S5* Control Unit" No. **BA SW 014**, in *Chapter 9.2.*

The special wiring diagrams attuned to the optimal furnishing of the dosing device are located in the device's terminal box.

9.3 Commissioning protocol

The commissioning protocol for the respective device is located in the accompanying documentation.

9.4 Operation data sheet

See operating instructions Part 2:

- For GRANUDOS **CPR Touch XL**, "*CPR Touch XL* Measuring and Control Unit" No. **BA MR 001** in *Chapter 9.4.*
- for GRANUDOS **Touch**, "*GRANUDOS Touch* Control Unit" No. **BA SW 010** in *Chapter 9.4.*
- for GRANUDOS **S5**, "*GRANUDOS S5* Control unit" No. **BA SW 014**, in *Chapter 9.4.*

9.5 Maintenance protocol

The maintenance protocol for the respective device is located in the accompanying documentation.

9.6 Spare parts list, wear parts list, consumables

The spare parts and wear parts listed in the following are available from your specialist dealer. Please always include the exact product designation and the device serial number with you orders. The device serial number can be found on the control unit's housing. Wear parts are excluded from the 2-year warranty. For these we assume a warranty of 1/2 year.

Spare parts list for GRANUDOS type VARIO-CPR Touch XL, GRANUDOS type VARIO-Touch and GRANUDOS S5

Device part		Designation	Code no.
Chlorine dosing	0	Dosing hopper, various types	upon request
	0	Cover D-funnel GR-VARIO-K	12866
	0	Dosing motor PLG 30-35	11676
	0	Dosing motor PLG 30-60 0.6m with maintenance kit	11546
	0	Motor bracket PLG-d32 GR-VARIO	11542
	0/X	Dosing screw d6/D26	11550
	0	Dosing pipe, heated GR	11556
	0	Knocker GR-VARIO complete	11558
	1/2	Empty switch cap. GPL white	11536
	3	Empty switch cap. GR/PAK,	10337-1
	0	Dust protection	11561
	0	Tension band GR/PAK	11500
	0	Safety belt GR-VARIO	31862
Flushing tub	0	Flushing tub GR-VARIO PE finished with NIG	13127-1
	0	Flushing pipe/swirler GR-VARIO	25078
	0	Flushing tub drain GR-VARIO 3/4"	25052
	0	NIG 2P 3/8" GR/PAK 0.35m	10496
Acid dosing	0	Acid pump Sa complete	11628
	0	Gear motor to peristaltic pump Sa	13557
	0	Pump casing Sa blue	14140
	0/X	Roller carrier Sa	12609
	0/X	Dosing hose Sa 4,8x1,6 Ph	13414
	0	Union nut Sa pump 4x1	16379
	0	Safety disc blue for roller carrier Sa	13633
	0	Cover for pump casing Sa, transparent	14259
	0	Hose bracket Sa 4.8 complete with dosing hose + marking red	12703
	0	Suction set N 30l GR-VARIO complete	12523-1
	0	Level switch 1/4" PVC/PP 3m	10495
	0	Dosing valve 1KFa 3/8"-GR acid	15099
	0/X	Maintenance kit for D valve 3/8" 1KFa	15764
Dirt filter d75	0	Flushable filter d75 for GR-VARIO/Flex complete	30173
	0	Filter top d75 with ball valve d25	27806
	0	Filter housing d75 GR-VARIO/Flex complete with flushing	30176
	0	Filter insert d75 GR/PAK VA complete	11640
	0	O-ring dirt filter GR	11258
	0	Filter vent 1/4" with ball valve and hose connection 6x1	20861
Floating valve.	0	Floating valve d25 GR-VARIO as of 5/05 complete	17006
	0	Valve body for floating valve d25, GR 10-100	17004
	0	Screw-on part for floating valve d25	17005
	0	Diaphragm/plug/tappet for floating valve d25	11284
	0	Diaphragm 34x4x0.5 for floating valve	16367
	0	Float	11621

Pump	0	Booster pump 1HM04 GR/PAK-SIC/SIC	24618-1
	0	Mechanical seal 1HM-2HMS SIC/SIC as of 01/2002	12800-1
	0	Pump connection GR-VARIO suction side 1"	24823
	0	Pump connection GR-VARIO pressure side 1"	24824
	2/3	Flushing water distribution GR + GPL **(Touch)**	17279
	1	Flushing water distribution GR-VARIO **(CPR-Touch XL)**	25077
	0	Connecting angle for dirt filter d75 - Lo pump	15907
	0/X	Condenser for booster pump Lo 2HMS3/A	14805
	1/2	Pressure switch M10 1-3b V70T complete	23364
	3	Pressure switch 1-3 bar M10x1 GR complete	17275
Suction pipe	0	Suction pipe 1/2" d40 with switch body	25659
	0	Flow switch ind.18x1- 0.7 m	25671
	0	Hose to suction unit 10x2x190Vi GR	11565-1
Injector	0	Injector Tim 1/2" GR/PAK/HT complete	24997
	0	Washer set for injector	11594
	0	Connecting angle for injector - cyclone	12308
Cyclone	3	Dissolving cyclone GR-VARIO	11612
	1/2	Dissolving cyclone for GPL and PB VARIO	11613
	1/2	No chlorine sensor; IR sensor 18x1 GPL/PAK/PB complete	11609
Maintenance kit	0/X	Seals, fuses, maintenance protocol	12631
Dust extraction	1/2	Solenoid valve	14040
	1/2	Dust extraction pump	17581
	1/2	Disconnect lever for solenoid valve	11829
	0	Maintenance kit for dust extraction	27954

Footnotes regarding the spare parts list:
Parts marked with “0” are designed for all **GRANUDOS-VARIO.**
Parts marked with “1” are specifically designed for VARIO-**CPR Touch XL.**
Parts marked with “2” are specifically designed for VARIO-**Touch.**
Parts marked with “3” are specifically designed for VARIO-**S5**.

Parts marked with “*” are **included in the Maintenance Kit Code no. 12631**.
Parts marked with “X” are **wear parts**.

Consumables
Please pay attention to the chemical manufacturers' safety data sheets!

10 Appendices

- Commissioning protocol
- Maintenance protocol

Personal notes

Commissioning protocol IP-033-EN
Granudos VARIO-CPR Touch XL

Werner Dosiertechnik

This protocol is to be completed by the commissioning technician! All warranty claims expire when no completed and signed commissioning protocol is available!

Object: _____ Date: __.__.____

City, Street, Street number: _____

Device type: _____ Year of construction: _____ Serial no.: _____

	Activity	Completed	Comment
1	**Dissolving system and measuring cell block (consider 6 seconds switching delay!)**		
1.1	Close the ball valves at the measuring cell (upstream of pre-filter)	☐	
1.2	Install the roller carriers of the hose pumps, see operating instructions, section 5.2	☐	
1.3	Connect the dosing canister and attach the chlorine barrel	☐	
1.4	Bleed the operating water pump	☐	
1.5	Adjust the water flow in the dissolving system	☐	
1.6	Check the pressure switch (41) Ball valve intake closed, device stopped, fault display	☐	
1.7	Adjust the pressure switch (41)	☐	
1.8	Check flow switch: Outlet ball valve closed, dosing stopped, fault indication	☐	
1.9	Set the water level in the rinsing tray	☐	
1.10	Check level switch: Switching body high - dosing stopped, fault indication	☐	
1.11	Check the level switch: Switching body low - device stopped, fault indication	☐	
1.12	Check the floater valve function - flow reacts gently	☐	
2	**Chlorine dosing technology**		
2.1	Heating function: Dosing pipe warm?	☐	
2.2	"Empty-switch" function: Drum turning - fault indication	☐	
2.3	Dosing motor function: Chlorine starting test program	☐	
2.4	Check the tensioning straps and safety belt	☐	
2.5	Introduction to drum changing, see operating instructions, section 5.2.3	☐	
3	**pH-reducer dosing system**		
3.1	Check the empty switch: Pull the suction lance out of the canister - see display	☐	
3.2	Check the dosing pump: Acid starting test program	☐	
4	**Control - after opening the controller**		
4.1	All connectors firmly latched	☐	
5	**Buffer tank (option)**		
5.1	Check function of the control and alarm switches in the tank: Indication on the display	☐	
5.2	Check prevention of the on site dosing pump reflux	☐	
5.3	Check the reflux prevention in filling system	☐	

Commissioning protocol IP-033-EN
Granudos VARIO-CPR Touch XL

Werner Dosiertechnik

6	**Measuring cell block; see operating instructions, part 2, MR001 for CPR Touch XL**		
6.1	Fill in cleaning beads	☐	
6.2	Insert electrodes	☐	
6.3	Open the ball valve at the measuring cell feed, set the measuring cell flow	☐	
6.4	Adjust the regulation parameters	☐	
7	**Other**		
7.1	Note down the inlet pressure and outlet pressure on the GRANUDOS	☐	Inlet pressure:___ barg; Outlet pressure:___ barg
7.2	Clean the GRANUDOS system	☐	
7.3	Discuss the operating instructions and hand them over	☐	

Other comments:

Commissioning and instruction performed by: _____

Persons instructed: _____

Signature of commissioner: _____

Countersigned by operator: _____

Maintenance protocol WP-040-EN
Granudos VARIO-CPR Touch XL

Werner Dosiertechnik

This protocol must be completed by the maintenance technician! We reserve the right to determine the warranty conditions when no completed and signed maintenance protocol is available.

Object: _____ Year of maintenance: 20___

City, Street, Street number: _____

Device type: _____ Year of construction:_____ Serial no.: _____

	Activity	Maintenance interval in months	Month 1	Month 2	Month 3	Month 4	Month 5	Month 6	Month 7	Month 8	Month 9	Month 10	Month 11	Month 12	Comment / additional work
1	**Dissolving system**														
1.1	Check the level switch min + max	6						☐						☐	
1.2	Check the pressure switch, adjust as required	6						☐						☐	
1.3	Check the flow switch	6						☐						☐	
1.4	Replace the float valve membrane and cone seal	12												☐	
1.5	Check and adjust the float valve function	6						☐						☐	
1.6	Replace the hose to the suction pipe	12												☐	
1.7	Check the pump impeller and lid (only for Calpeda pumps)	12												☐	
1.8	Check capacitor of the booster pump; replace capacitor if electrical capacity <7µF	12												☐	
1.9	Check pump floating ring seal for tightness	6						☐						☐	
1.10	Check pump roller bearings for noises	6						☐						☐	
1.11	Clean the dirt filter	3			☐			☐			☐			☐	
1.12	Replace all O-rings	12												☐	
1.13	Nozzle diameter diffuser < 6.5 mm - check; (check passage with 6.5 mm drill)	12												☐	
2	**Chlorine dosing device**														
2.1	Heating function: Dosing pipe warm?	6						☐						☐	
2.2	Check the chlorine-empty switch	6						☐						☐	
2.3	Clean and check the dosing screw	6						☐						☐	
2.4	Dosing motor: Replace the seals	12												☐	
2.5	Replace the dust cap seal	12												☐	
3	**Acid dosing system**														
3.1	Check function of the hose pump and check for moisture and corrosion	1	☐	☐	☐	☐	☐	☐	☐	☐	☐	☐	☐	☐	
3.2	Check function of the empty switch	6						☐						☐	
3.3	Replace dosing hose	12												☐	
3.4	Replace the seals of the acid dosing valve	12												☐	
4	**Dust extraction (option)**														
4.1	Completely check and clean the flushing ring of the suspensor, including the injector and flushing pipe	2		☐		☐		☐		☐		☐		☐	
4.2	Check the drill holes of the outlet connection for contamination and clean them	2		☐		☐		☐		☐		☐		☐	
4.3	Check / exchange the disconnect lever of the solenoid valve	12												☐	

Maintenance protocol WP-040-EN
Granudos VARIO-CPR Touch XL

Werner Dosiertechnik

	Activity	Maintenance interval in months	Month 1	Month 2	Month 3	Month 4	Month 5	Month 6	Month 7	Month 8	Month 9	Month 10	Month 11	Month 12	Comment / additional work
5	**Buffer tank (option)**														
5.1	Check function of the level switch 4x buffer tank + 1x collecting tub	6						☐						☐	
5.2	Clean buffer tank with water and diluted acid	12												☐	
5.3	Replace the active carbon filter	12												☐	
6	**Control**														
6.1	Check all inputs	12												☐	
6.2	Check all outputs	12												☐	
6.3	Check parameter settings and correct it if required	12												☐	
7	**Measuring cell block**														
7.1	Check and clean preliminary filter	12												☐	
7.2	DPD1 measurement, adjust free chlorine	12												☐	
7.3	pH measurement, adjust the pH electrode	12												☐	
7.4	Adjust the reference counter electrode	12												☐	
7.5	Chlorine electrode, replace seal set	12												☐	
7.6	Replace redox electrode, seal set	12												☐	
7.7	Replace flow controller, maintenance set	12												☐	
7.8	Replace the membrane of the pressure control valve (2)	12												☐	
8	**Other work**														
8.1	Thoroughly clean the dosing system	1	☐	☐	☐	☐	☐	☐	☐	☐	☐	☐	☐	☐	
8.2	Check dosing line for strength and wall thickness	12												☐	
9	**Maintenance work at each drum exchange**														
9.1	Clean the solution pipe for pollution	F	☐	☐	☐	☐	☐	☐	☐	☐	☐	☐	☐	☐	
9.2	Clean dosing hopper from incrustations	F	☐	☐	☐	☐	☐	☐	☐	☐	☐	☐	☐	☐	
9.3	Test chlorine and acid dosing	F	☐	☐	☐	☐	☐	☐	☐	☐	☐	☐	☐	☐	
9.4	Take note of pumping noises	F	☐	☐	☐	☐	☐	☐	☐	☐	☐	☐	☐	☐	
9.5	Check the system for tightness	F	☐	☐	☐	☐	☐	☐	☐	☐	☐	☐	☐	☐	
9.6	Check the hose of the dust extraction (option) and clean it if necessary	F	☐	☐	☐	☐	☐	☐	☐	☐	☐	☐	☐	☐	

Other comments:

Maintenance carried out and system checked for correct working: _____ Date: _____
Signature

Countersigned by operator: _____
Signature

Commissioning protocol IP-039-EN
Granudos VARIO-Touch

Werner Dosiertechnik

This protocol is to be completed by the commissioning technician! All warranty claims expire when no completed and signed commissioning protocol is available!

Object: _____ Date: __.__.____

City, Street, Street number: _____

Device type: _____ Year of construction: _____ Serial no.: _____

	Activity	Completed	Comment
1	**Dissolving system (consider 6 seconds switching delay!)**		
1.1	Install the roller carriers of the hose pumps, see operating instructions, section 5.2	☐	
1.2	Connect the dosing canister and attach the chlorine barrel	☐	
1.3	Bleed the operating water pump	☐	
1.4	Adjust the water flow in the dissolving system	☐	
1.5	Check the pressure switch (41) Ball valve intake closed, device stopped, fault display	☐	
1.6	Adjust the pressure switch (41)	☐	
1.7	Check flow switch: Outlet ball valve closed, dosing stopped, fault indication	☐	
1.8	Set the water level in the rinsing tray	☐	
1.9	Check level switch: Switching body high - dosing stopped, fault indication	☐	
1.10	Check the level switch: Switching body low - device stopped, fault indication	☐	
1.11	Check the floater valve function - flow reacts gently	☐	
2	**Chlorine dosing technology**		
2.1	Heating function: Dosing pipe warm?	☐	
2.2	"Empty-switch" function: Drum turning - fault indication	☐	
2.3	Dosing motor function: Chlorine starting test program	☐	
2.4	Check the tensioning straps and safety belt	☐	
2.5	Introduction to drum changing, see operating instructions, section 5.2.3	☐	
3	**pH-reducer dosing system**		
3.1	Check the empty switch: Pull the suction lance out of the canister - see display	☐	
3.2	Check the dosing pump: Acid starting test program	☐	
4	**Control - after opening the controller**		
4.1	All connectors firmly latched	☐	
5	**Buffer tank (option)**		
5.1	Check function of the control and alarm switches in the tank: Indication on the display	☐	
5.2	Check prevention of the on site dosing pump reflux	☐	
5.3	Check the reflux prevention in filling system	☐	
6	**Other**		
6.1	Note down the inlet pressure and outlet pressure on the GRANUDOS	☐	Inlet pressure:___ barg; outlet pressure:___ barg
6.2	Clean the GRANUDOS system	☐	
6.3	Discuss the operating instructions and hand them over	☐	

Commissioning protocol IP-039-EN
Granudos VARIO-Touch

Werner Dosiertechnik

Other comments:

Commissioning and instruction performed by: _____

Persons instructed: _____

Signature of commissioner: _____

Countersigned by operator: _____

Maintenance protocol WP-045-EN
Granudos VARIO-Touch

Werner Dosiertechnik

This protocol must be completed by the maintenance technician! We reserve the right to determine the warranty conditions when no completed and signed maintenance protocol is available.

Object: _____ Year of maintenance: 20____

City, Street, Street number: _____

Device type: _____ Year of construction: _____ Serial no.: _____

	Activity	Maintenance interval in	Month 1	Month 2	Month 3	Month 4	Month 5	Month 6	Month 7	Month 8	Month 9	Month 10	Month 11	Month 12	Comment / additional work
1	**Dissolving system**														
1.1	Check the level switch min + max	6						☐						☐	
1.2	Check the pressure switch, adjust as required	6						☐						☐	
1.3	Check the flow switch	6						☐						☐	
1.4	Replace the float valve membrane and cone seal	12												☐	
1.5	Check and adjust the float valve function	6						☐						☐	
1.6	Replace the hose to the suction pipe	12												☐	
1.7	Check the pump impeller and lid (only for Calpeda pumps)	12												☐	
1.8	Check capacitor of the booster pump; replace capacitor if electrical capacity <7µF	12												☐	
1.9	Check pump floating ring seal for tightness	6						☐						☐	
1.10	Check pump roller bearings for noises	6						☐						☐	
1.11	Clean the dirt filter	3			☐			☐			☐			☐	
1.12	Replace all O-rings	12												☐	
1.13	Nozzle diameter diffuser < 6.5 mm - check; (check passage with 6.5 mm drill)	12												☐	
2	**Chlorine dosing device**														
2.1	Heating function: Dosing pipe warm?	6						☐						☐	
2.2	Check the chlorine-empty switch	6						☐						☐	
2.3	Clean and check the dosing screw	6						☐						☐	
2.4	Dosing motor: Replace the seals	12												☐	
2.5	Replace the dust cap seal	12												☐	
3	**Acid dosing system**														
3.1	Check function of the hose pump and check for moisture and corrosion	1	☐	☐	☐	☐	☐	☐	☐	☐	☐	☐	☐	☐	
3.2	Check function of the empty switch	6						☐						☐	
3.3	Replace dosing hose	12												☐	
3.4	Replace the seals of the acid dosing valve	12												☐	
4	**Dust extraction (option)**														
4.1	Completely check and clean the flushing ring of the suspensor, including the injector and flushing pipe	2		☐		☐		☐		☐		☐		☐	
4.2	Check the drill holes of the outlet connection for contamination and clean them	2		☐		☐		☐		☐		☐		☐	
4.3	Check / exchange the disconnect lever of the solenoid valve	12												☐	

Maintenance protocol WP-045-EN
Granudos VARIO-Touch

Werner Dosiertechnik

	Activity	Maintenance interval in	Month 1	Month 2	Month 3	Month 4	Month 5	Month 6	Month 7	Month 8	Month 9	Month 10	Month 11	Month 12	Comment / additional work
5	**Buffer tank (option)**														
5.1	Check function of the level switch, 4x buffer tank + 1x collecting tub	6						☐						☐	
5.2	Clean the buffer tank with water and diluted acid	12												☐	
5.3	Replace the active carbon filter	12												☐	
6	**Control**														
6.1	Check all inputs	12												☐	
6.2	Check all outputs	12												☐	
6.3	Check parameter settings and correct it if required	12												☐	
7	**Other work**														
7.1	Thoroughly clean the dosing system	1	☐	☐	☐	☐	☐	☐	☐	☐	☐	☐	☐	☐	
7.2	Check dosing line for strength and wall thickness	12												☐	
8	**Maintenance work at each drum exchange**														
8.1	Clean the solution pipe for pollution	F	☐	☐	☐	☐	☐	☐	☐	☐	☐	☐	☐	☐	
8.2	Clean dosing hopper from incrustations	F	☐	☐	☐	☐	☐	☐	☐	☐	☐	☐	☐	☐	
8.3	Test chlorine and acid dosing	F	☐	☐	☐	☐	☐	☐	☐	☐	☐	☐	☐	☐	
8.4	Take note of pumping noises	F	☐	☐	☐	☐	☐	☐	☐	☐	☐	☐	☐	☐	
8.5	Check the system for tightness	F	☐	☐	☐	☐	☐	☐	☐	☐	☐	☐	☐	☐	
8.6	Check the hoses of the dust extraction (option) and clean it if necessary	F	☐	☐	☐	☐	☐	☐	☐	☐	☐	☐	☐	☐	

Other comments:

Maintenance carried out and system checked for correct working: _____ Date: _____
Signature

Countersigned by operator: _____
Signature

Commissioning protocol IP-061-EN
Granudos VARIO-S5

Werner Dosiertechnik

This protocol has to be completed by the commissioning technician! All warranty claims expire when no completed and signed commissioning protocol is available!

Object: _____ Date: __.__.____

City, Street, Street number: _____

Device type: _____ Year of construction: _____ Serial no.: _____

	Activity	Completed	Comment
1	**Dissolving system (consider 6 seconds switching delay!)**		
1.1	Install the roller carriers of the hose pumps, see operating instructions, section 5.2.1	☐	
1.2	Connect the dosing canister and attach the chlorine barrel	☐	
1.3	Bleed the operating water pump	☐	
1.4	Adjust the water flow in the dissolving system	☐	
1.5	Check the pressure switch (41) Ball valve intake closed, device stopped, fault display	☐	
1.6	Adjust the pressure switch (41)	☐	
1.7	Check flow switch: Outlet ball valve closed, dosing stopped, fault indication	☐	
1.8	Set the water level in the rinsing tray	☐	
1.9	Check level switch: Switching body high - dosing stopped, fault indication	☐	
1.10	Check the level switch: Switching body low - device stopped, fault indication	☐	
1.11	Check the floater valve function - flow reacts gently	☐	
2	**Chlorine dosing system**		
2.1	Heating function: Dosing pipe warm?	☐	
2.2	"Empty-switch" function: Drum turning - fault indication	☐	
2.3	Dosing motor function: Chlorine starting test program	☐	
2.4	Check the tensioning straps and safety belt	☐	
2.5	Introduction to drum changing, see operating instructions, section 5.2.3	☐	
3	**pH-reducer dosing system**		
3.1	Check the empty switch: Pull the suction lance out of the canister - see display	☐	
3.2	Check the dosing pump: Test program	☐	
4	**Control - after opening the controller**		
4.1	All connectors firmly latched	☐	
5	**Buffer tank (option)**		
5.1	Check function of the control and alarm switches in the tank: Indication on the display	☐	
5.2	Check prevention of the on site dosing pump reflux	☐	
5.3	Check the reflux prevention in filling system	☐	
6	**Other**		
6.1	Note down the inlet pressure and outlet pressure on the GRANUDOS	☐	Inlet pressure:___ barg; outlet pressure:___ barg
6.2	Clean the GRANUDOS device	☐	
6.3	Discuss the operating instructions and hand them over	☐	

Continue to page 2

Commissioning protocol IP-061-EN
Granudos VARIO-S5

Werner Dosiertechnik

Other comments:

Commissioning and instruction performed by: _____

Persons instructed: _____

Signature of commissioner: _____

Countersigned by operator: _____

Maintenance protocol WP-067-EN
Granudos VARIO-S5

Werner Dosiertechnik

This protocol has to be completed by the maintenance technician! We reserve the right to determine the warranty conditions when no completed and signed maintenance protocol is available.

Object: _____ Year of maintenance: 20____

City, Street, Street number: _____

Device type: _____ Year of construction: _____ Serial no.: _____

	Activity	Maintenance interval in	Month 1	Month 2	Month 3	Month 4	Month 5	Month 6	Month 7	Month 8	Month 9	Month 10	Month 11	Month 12	Comment / additional work
1	**Dissolving system**														
1.1	Check the level switch min + max	6						☐						☐	
1.2	Check the pressure switch, adjust as required	6						☐						☐	
1.3	Check the flow switch	6						☐						☐	
1.4	Replace the float valve membrane and cone seal	12												☐	
1.5	Check and adjust the float valve function	6						☐						☐	
1.6	Replace the hose to the suction pipe	12												☐	
1.7	Check the pump impeller and lid (only for Calpeda pumps)	12												☐	
1.8	Check capacitor of the booster pump; replace capacitor if electrical capacity <7µF	12												☐	
1.9	Check pump floating ring seal for tightness	6						☐						☐	
1.10	Check pump roller bearings for noises	6						☐						☐	
1.11	Clean the dirt filter	3			☐			☐			☐			☐	
1.12	Replace all O-rings	12												☐	
1.13	Nozzle diameter diffuser < 6.5 mm - check; (check passage with 6.5 mm drill)	12												☐	
2	**Chlorine dosing system**														
2.1	Heating function: Dosing pipe warm?	6						☐						☐	
2.2	Check the chlorine-empty switch	6						☐						☐	
2.3	Clean and check the dosing screw	6						☐						☐	
2.4	Dosing motor: Replace the seals	12												☐	
2.5	Replace the dust cap seal	12												☐	
3	**Acid dosing system**														
3.1	Check function of the hose pump and check for moisture and corrosion	1	☐	☐	☐	☐	☐	☐	☐	☐	☐	☐	☐	☐	
3.2	Check function of the empty switch	6						☐						☐	
3.3	Replace dosing hose	12												☐	
3.4	Replace the seals of the acid dosing valve	12												☐	
4	**Dust extraction (option)**														
4.1	Completely check and clean the flushing ring of the suspensor, including the injector and flushing pipe	2		☐		☐		☐		☐		☐		☐	
4.2	Check the drill holes of the outlet connection for contamination and clean them	2		☐		☐		☐		☐		☐		☐	
4.3	Check / exchange the disconnect lever of the solenoid valve	12												☐	

Key: F= at each granular filling; 1 = every month, 3 = every 3 months, 6 = every 6 months, etc.; ☒ = work completed

Maintenance protocol WP-067-EN
Granudos VARIO-S5

Werner Dosiertechnik

	Activity	Maintenance interval in	Month 1	Month 2	Month 3	Month 4	Month 5	Month 6	Month 7	Month 8	Month 9	Month 10	Month 11	Month 12	Comment / additional work
5	**Buffer tank (option)**														
5.1	Check function of the level switch, 4x buffer tank + 1x collecting tub	6						☐						☐	
5.2	Clean the buffer tank with water and diluted acid	12												☐	
5.3	Replace the active carbon in the filter	12												☐	
6	**Control**														
6.1	Check all inputs	12												☐	
6.2	Check all outputs	12												☐	
6.3	Check parameter settings and correct it if required	12												☐	
7	**Other work**														
7.1	Thoroughly clean the dosing device	1	☐	☐	☐	☐	☐	☐	☐	☐	☐	☐	☐	☐	
7.2	Check dosing line for strength and wall thickness, replace as required	12												☐	
8	**Maintenance work at each drum exchange**														
8.1	Clean the solution pipe for pollution	F	☐	☐	☐	☐	☐	☐	☐	☐	☐	☐	☐	☐	
8.2	Clean dosing hopper from incrustations	F	☐	☐	☐	☐	☐	☐	☐	☐	☐	☐	☐	☐	
8.3	Test chlorine and acid dosing	F	☐	☐	☐	☐	☐	☐	☐	☐	☐	☐	☐	☐	
8.4	Take note of pumping noises	F	☐	☐	☐	☐	☐	☐	☐	☐	☐	☐	☐	☐	
8.5	Check the system for tightness	F	☐	☐	☐	☐	☐	☐	☐	☐	☐	☐	☐	☐	
8.6	Check the hoses of the dust extraction (option) and clean it if necessary	F	☐	☐	☐	☐	☐	☐	☐	☐	☐	☐	☐	☐	

Other comments:

Maintenance carried out and system checked for correct working: _____ Date: _____
Signature

Countersigned by operator: _____
Signature