Operating Instructions

GRANUDOS Flex Dosing Unit

Operating Instructions Part 1, (without control unit)

for:

GRANUDOS Flex-CPR Touch XL

GRANUDOS Flex-Touch

GRANUDOS Flex-S5





Table of contents

1 About these instructions / general 4
1.1 Scope of applicability 4
1.2 Target group 4
1.3 Symbols used 4
1.4 Warranty 5
1.4.1 General terms and conditions of warranty 5
1.5 Additional information 6
1.6 Information regarding support queries 6
2 Safety 7
2.1 Intended use 7
2.2 Safety notices 7
2.2.1 Handling of chemicals, risks to humans and the environment 8
2.2.2 Protective measures and rules of conduct 8
3 Product description – Functional description – Scope of delivery 9
3.1.1 Scope of delivery / accessories 9
3.2 Product description 9
3.2.1 Functional description of the overall system 9
3.2.2 Plastic housing with built-in components (standard) 12
3.2.3 Chlorine dosing (standard) 14
3.2.4 Dissolving unit (standard) 15
3.2.5 Acid dosing (standard) 18
3.2.6 Flocculant dosing (option), (only CPR Touch XL) 18
3.2.7 Dust extraction (option) 19
3.2.8 Buffer tank with/without collecting tub (only for CPR Touch XL and Touch) (option) 20
3.2.9 Filling appliance (option) 21
3.2.10 GRANUDOS control unit 21
3.3 Identification of the device/ Identification plate 22
3.4 Technical data 23
3.4.1 Requirements for the calcium hypochlorite granulate 25
3.5 Transport and storage 25
3.5.1 General notices, a separate position for the warning notice? 25
3.5.2 Storage of chemicals 25
4 Installation 26
4.1 Select the installation site 26
4.2 Installation instructions / installation suggestion 26
4.2.1 Suggested installation 27
4.3 Mechanical installation 28
4.3.1 GRANUDOS Flex installation 28
4.3.2 Buffer tank installation 28
4.4 Hydraulic installation 28
4.4.1 Installation of the dissolving and measuring water supply 31
4.4.2 Installation of the dosing line for the chlorine solution 34
4.4.3 Buffer tank installation (option) 34
4.4.4 Installation of the overflow line for the flushing tub, collecting tub and dirt filter flushing function 34
4.4.5 Flocculant dosing **(only CPR Touch XL)** 34
4.5 Electrical installation 35
4.5.1 Opening and closing the housing, control unit **CPR Touch XL and Touch** 35
4.5.2 Opening and closing the housing, control unit **S5** 36
4.5.3 Electrical connection 36
5 Commissioning/ recommissioning 38
5.1 Safety notices 38

5.2 Commissioning 38
5.2.1 Inserting/replacing the peristaltic pump's roller carriers 38
5.2.2 Preparing acid dosing for operation 40
5.2.3 Preparing flocculant dosing for operation **(only CPR Touch XL)** 40
5.2.4 Filling the dosing hopper with chlorine granulate 41
5.2.5 Venting of the booster pump and the piping to the GRANUDOS 45
5.2.6 Venting the dust extraction pump (option) 46
5.2.7 Setting the water flow in the dissolving unit and the pressure switch 47
5.2.8 Setting the water level in the flushing tub 49
6 Operation / Use 50
6.1 Replenish consumables 50
6.2 Operation of the control unit 50
7 Maintenance / Care / Fault removal 51
7.1 Device maintenance 51
7.1.1 Cleaning the dirt filter 51
7.1.2 Replacing the dosing screw and the dust gasket 52
7.1.3 Injector with flow switch, replacing the hole washer 56
7.1.4 Setting the chlorine empty switch at the dosing hopper (option) 57
7.1.5 Replacing the dosing hose of the peristaltic pumps (acid or flocculation) 57
7.1.6 Cleaning the dust extraction (option) 59
7.2 Fault removal 60
8 Decommissioning – Storage – Disposal 61
8.1 General 61
8.2 Decommissioning of the GRANUDOS Flex dosing device 61
8.3 Decommissioning of the buffer tank (option) 61
8.4 Disposal of used parts and operating materials 61
9 Documents 62
9.1 Declaration of conformity 62
9.2 Wiring diagrams 63
9.3 Commissioning protocol 64
9.4 Operation data sheet 65
9.5 Maintenance protocol 66
9.6 Spare parts list, wear parts list 67
10 Appendices 68

Reproduction of any kind and translation into other languages, even in excerpts, is only permitted with the express authorisation of the company WDT - Werner Dosiertechnik GmbH & Co. KG.

Subject to technical modifications.

These operating instructions are an English translation of the original German version by the company WDT.

Responsible for the content:

WDT - Werner Dosiertechnik GmbH & Co. KG
Hettlinger Str. 17
D-86637 Wertingen-Geratshofen

Phone: +49 (0) 82 72 / 9 86 97 – 0
Fax: +49 (0) 82 72 / 9 86 97 – 19

Web: https://werner-dosiertechnik.de
Mail: info@werner-dosiertechnik.de

1 About these instructions / general

1.1 Scope of applicability

These instructions describe the function, installation, commissioning and operation of the **GRANUDOS Flex-CPR Touch XL, Flex-Touch and Flex-S5** dosing device along with the corresponding accessories.

The Operating Instructions must be read carefully before use and kept on the device for direct use!

These Operating Instructions are valid in conjunction with the Operating Instructions:

- **"CPR-Touch XL Measuring and Control Unit" No. BA MR 001 or**
- **"GRANUDOS Touch Control Unit" No. BA SW 010 or**
- **"GRANUDOS S5 Control Unit" No. BA SW 014.**

1.2 Target group

Only our instructed partners and people who have been trained in the device functions are permitted to work on the system, provided that they have read and understood these Operating Instructions.

Electrical connection work may only be carried out by appropriately trained specialists!

1.3 Symbols used

This document uses the following types of safety notices as well as general notices:



DANGER!

"DANGER" denotes a safety notice which, if disregarded, will lead to serious or life-threatening injuries or death!



DANGER DUE TO CORROSIVE SUBSTANCES!

This safety notice denotes risks which, if disregarded when handling chemicals, will lead to serious or life-threatening injuries or death!



WARNING!

"Warning" denotes a safety notice which, if disregarded, may lead to serious or life-threatening injuries or death!



CAUTION!

"Caution" denotes a safety notice which, if disregarded, may lead to injuries!



ATTENTION!

"ATTENTION" denotes a safety notice which, if disregarded, may lead to material damage or may impair the function of the system!



ATTENTION! ESD SENSITIVE COMPONENTS!

"ESD SENSITIVE" denotes electronic components that may be damaged by electrostatic discharges.

The generally accepted safety precautions for electronic components must be observed when handling the devices!



NOTICE!

A “NOTICE” denotes information that is of particular importance for the smooth running of operations and that can disrupt the operating process if not observed.



TIP!

A “TIP” denotes information that may result in improvements in the operating process.



USE FACE PROTECTION!

Wear approved face protection to prevent facial injuries due to contact with hot or chemical materials.



USE HAND PROTECTION!

Wear approved hand protection to prevent hand injuries due to contact with hot or chemical materials (according to DIN EN 374: Protective gloves against dangerous chemicals and micro-organisms).



USE PROTECTIVE APRON!

Wear an approved protective apron to prevent injuries to the front of your body due to contact with hot or chemical materials.



USE FOOT PROTECTION!

Wear approved foot protection to prevent foot injuries due to contact with hot or chemical materials or falling objects.

1.4 Warranty

All WDT devices and systems are manufactured using modern production methods and are subject to comprehensive quality control. However, should there be a reason for complaint, any compensation claims shall be directed to the company WDT in accordance with the general terms and conditions of warranty.

1.4.1 General terms and conditions of warranty

The company WDT assumes a 2-year warranty, starting with the commissioning, up to 27 months after delivery; subject to correct installation and commissioning with a completed and signed commissioning protocol.

Exempt from this are wear parts such as seals, hoses, diaphragms, dosing screws, electrodes, roller carriers and other parts that are subject to mechanical or chemical wear and tear. For these we assume a warranty of 1/2 year.

Our enterprise resource planning system requires an invoice for each delivery (including warranty services). When returning a defective component, upon review you will receive a corresponding credit, if applicable. We request a return within 14 days.

The costs for subsequent damage and for the processing of warranty claims are excluded.

There are no warranty claims for damage caused by frost, water or electrical overvoltage or by improper handling.

NOTICE!

In order to protect the warranty claims, please mail the completed commissioning protocol, along with the defective component, to the company WDT.

Without the commissioning protocol, we reserve the right to an exclusion of warranty.

CAUTION!

In the event of any unauthorised modifications to the device, the warranty and product liability will be voided!

1.5 Additional information

Additional information concerning specific topics, such as design of the dosing performance or description of the operating parameters, may be obtained from your specialist dealer, or directly from:

WDT - Werner Dosiertechnik GmbH & Co. KG
Hettlinger Str. 17
D-86637 Wertingen-Geratshofen
Phone: +49 (0) 82 72 / 9 86 97 – 0
Fax: +49 (0) 82 72 / 9 86 97 – 19
Web: https://werner-dosiertechnik.de
Mail: info@werner-dosiertechnik.de

1.6 Information regarding support queries

The GRANUDOS Flex series' control unit is subject to continued further development of both its firmware and hardware. We always strive to preserve the compatibility of the components used.

For spare part orders, we require the following data. You can find these on the identification plate.

- device designation
- device serial number
- year of manufacture

In addition, we require the following data for technical support queries. These are located in the menu item **`Menu` ▸ `Service` ▸ `Info`**.

- current DSP version
- current I/O version
- current http version

2 Safety

2.1 Intended use

The GRANUDOS Flex dosing device and the buffer tank may only be used for the disinfection of swimming pool water with calcium hypochlorite.

Also pay attention to the locally applicable regulations concerning accident prevention, occupational safety and drinking water protection!

NOTICE!

- The Granudos standard booster pump (BP) is **not suitable for saline water (seawater/brine pools)**. A special version is available for this case. Pay attention to this when placing your order!

2.2 Safety notices

Carefully read and pay attention to the operating instructions prior to installation and use of the device!

Work on the device and changes in the settings may only be carried out by properly instructed persons!

ATTENTION!

Remote access by non-authorised persons possible!

The GRANUDOS Flex control unit makes remote display possible using network-enabled devices.

- **The operator is responsible for ensuring that only authorised persons can access the device!**
- **The operator, or their authorised representative, is further responsible for the safety of all Internet or WLAN connections!**

Pay attention to the warning notices on the device



2.2.1 Handling of chemicals, risks to humans and the environment



DANGER DUE TO CORROSIVE SUBSTANCES!

Formation of substances hazardous to health when handling and mixing chemicals!

In emergencies, contact the respective poison control centre.

EMERGENCY NUMBER:

MUNICH EMERGENCY POISON CENTRE (OR ANY OTHER POISON CENTRE)

PHONE: +49 89 19240

2.2.2 Protective measures and rules of conduct



DANGER DUE TO CORROSIVE SUBSTANCES!

Development of chlorine gas when mixing chemicals!



The GRANUDOS Flex dosing system doses both the calcium hypochlorite granulate and the pH-reducer (acid) from the delivery container. These substances have a strong reaction when combined and release toxic chlorine gas outside of water.

- **For this reason, the greatest possible care is required when working with these chemicals!**
- **Wearing personal protective equipment is essential: Face protection, protective gloves, protective apron, foot protection.**
- **The chlorine granulate and the acid must not be mixed with each other or with other chemicals or substances!**
- **Store chemicals in such a way that they are not accessible to unauthorised persons.**
- **When storing chemicals, pay attention to the chemical manufacturers' safety data sheets!**

3 Product description – Functional description – Scope of delivery

3.1.1 Scope of delivery / accessories

The scope of delivery includes the “GRANUDOS Flex” dosing system, which consists of the following components:

- Housing made of rotationally sintered PE in light grey
- Dosing appliance for chlorine granulate
- Dosing appliance for acid
- Dissolving unit for chlorine and acid (with dust protection housing)
- Dosing appliance for flocculant (**only CPR Touch XL**)

The following options are available for the dosing system

- GRANUDOS collecting tub
- Dosing hopper 15 kg
- Filling appliance for various 10 kg buckets with distance pipe Art. 30732 for Dosing hopper
- Front cover for measuring cell block (**only CPR Touch XL**)
- Dust extraction
- Buffer tank with collecting tub (not for Flex-S5)
- Flushing function at the dirt filter

3.2 Product description

The GRANUDOS dosing system is used for the disinfection of swimming pool water with calcium hypochlorite.

3.2.1 Functional description of the overall system

The GRANUDOS Flex represents a dosing device for dosing calcium hypochlorite granulate. The chemical is dissolved and fed into the pipe by means of a booster pump (BP) via an injector. The acid dosing required for pH regulation of the swimming pool water is integrated and organised via the software and a relay system in such a way that a joint dosing of chlorine and acid is excluded. The GRANUDOS Flex dosing device is particularly well-suited for swimming pools with a water volume between 50 and 400 m³.

The functions of the GRANUDOS Flex-CPR Touch XL

- Measuring of free chlorine with open measuring cell potentiostatic, pH value, redox potential and temperature
- Controlling the chlorine dosing using the measured value for free chlorine or for redox potential.
- Dosing of chlorine granulate from the dosing hopper using the dosing screw and the knocker
- Dosing of acid (pH-reducer) from the delivery container using a peristaltic pump
- Dosing of flocculant from the delivery container using a peristaltic pump
- Filling a buffer tank with chlorine solution for disinfecting additional small pools using dosing pumps (option)

The functions of the GRANUDOS Flex-Touch

- Dosing of chlorine granulate from the dosing hopper using the dosing screw and the knocker
- Dosing of acid (pH-reducer) from the delivery container using a peristaltic pump
- Filling a buffer tank with chlorine solution for disinfecting additional small pools using dosing pumps (option)

The functions of the GRANUDOS Flex-S5

- Dosing of chlorine granulate from the dosing hopper using the dosing screw and the knocker
- Dosing of acid (pH-reducer) from the delivery container using a peristaltic pump

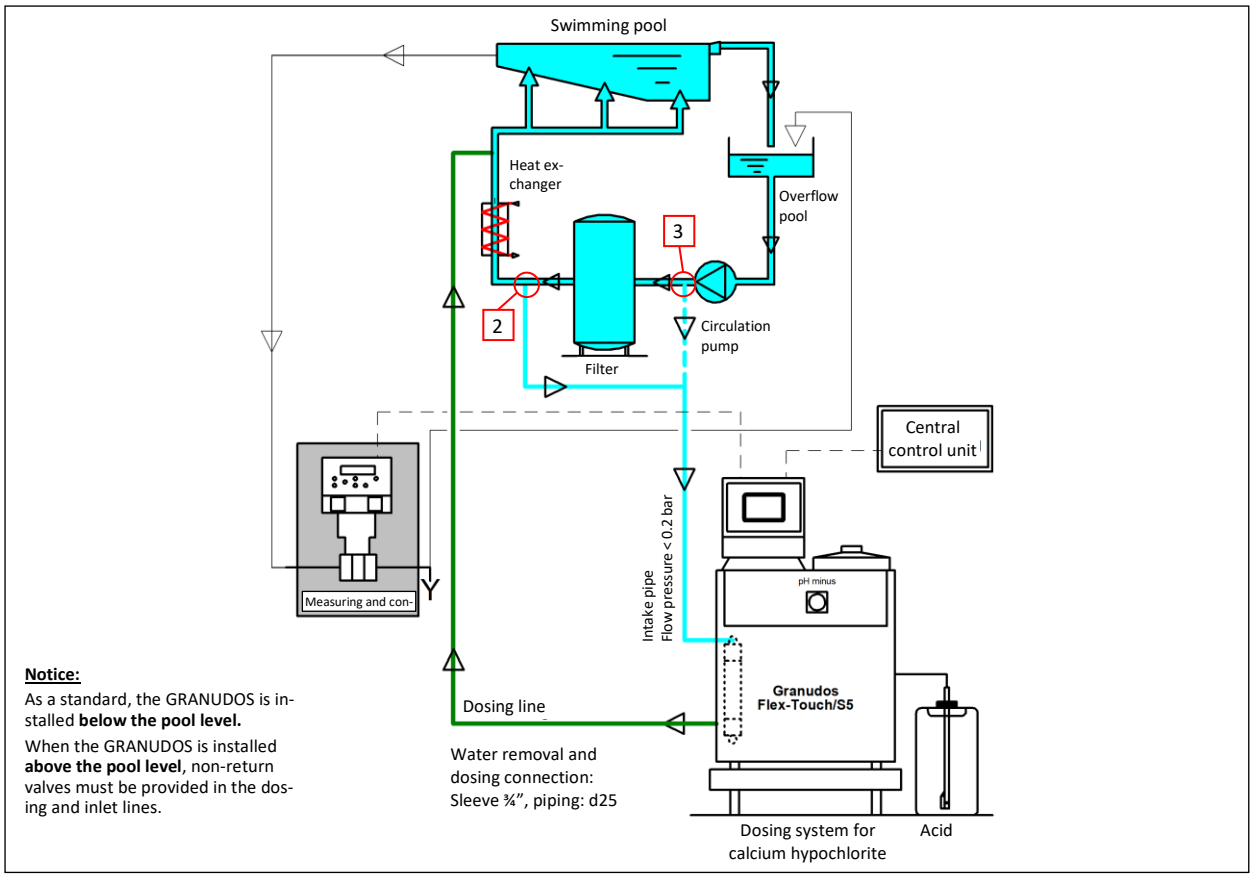

Figure 1: Flow diagram GRANUDOS Flex Touch and Flex S5, without buffer tank

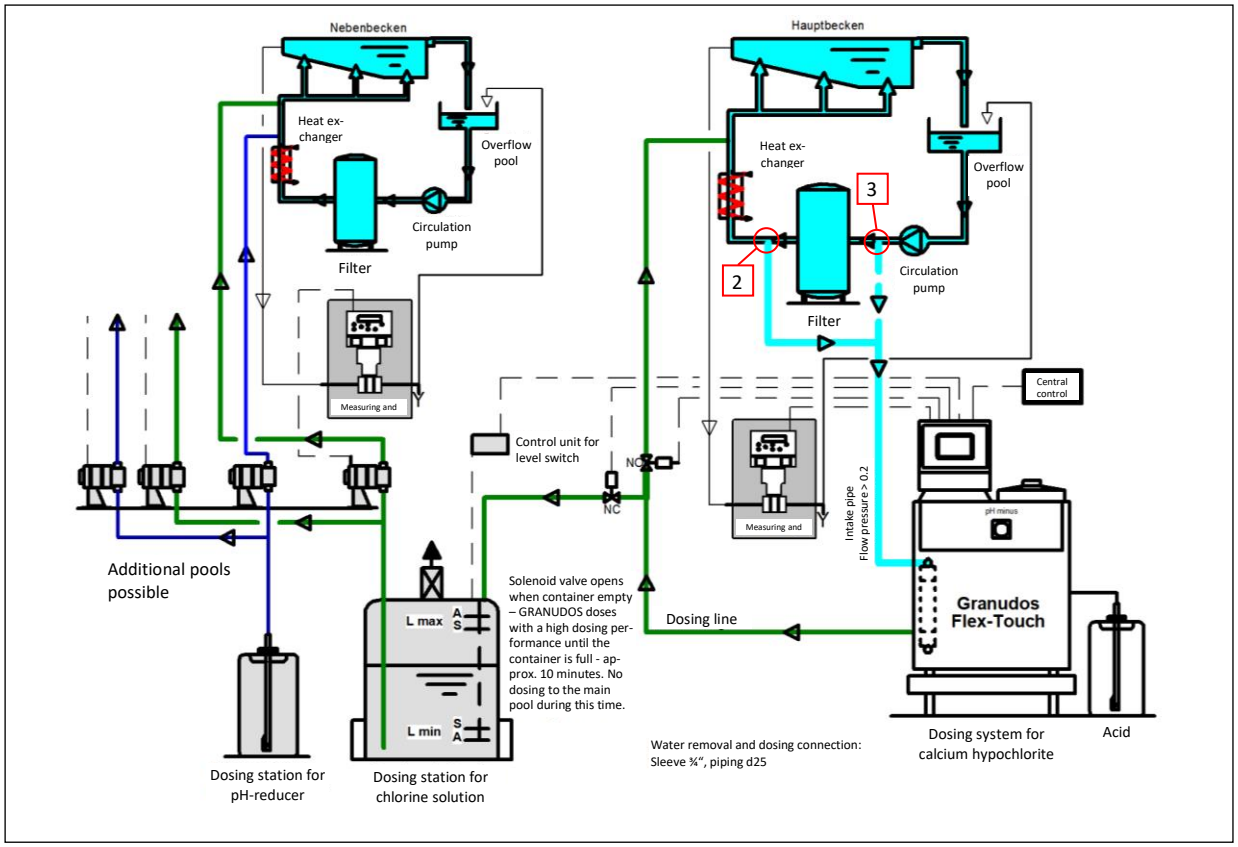

Figure 2: Flow diagram GRANUDOS Flex Touch with buffer tank

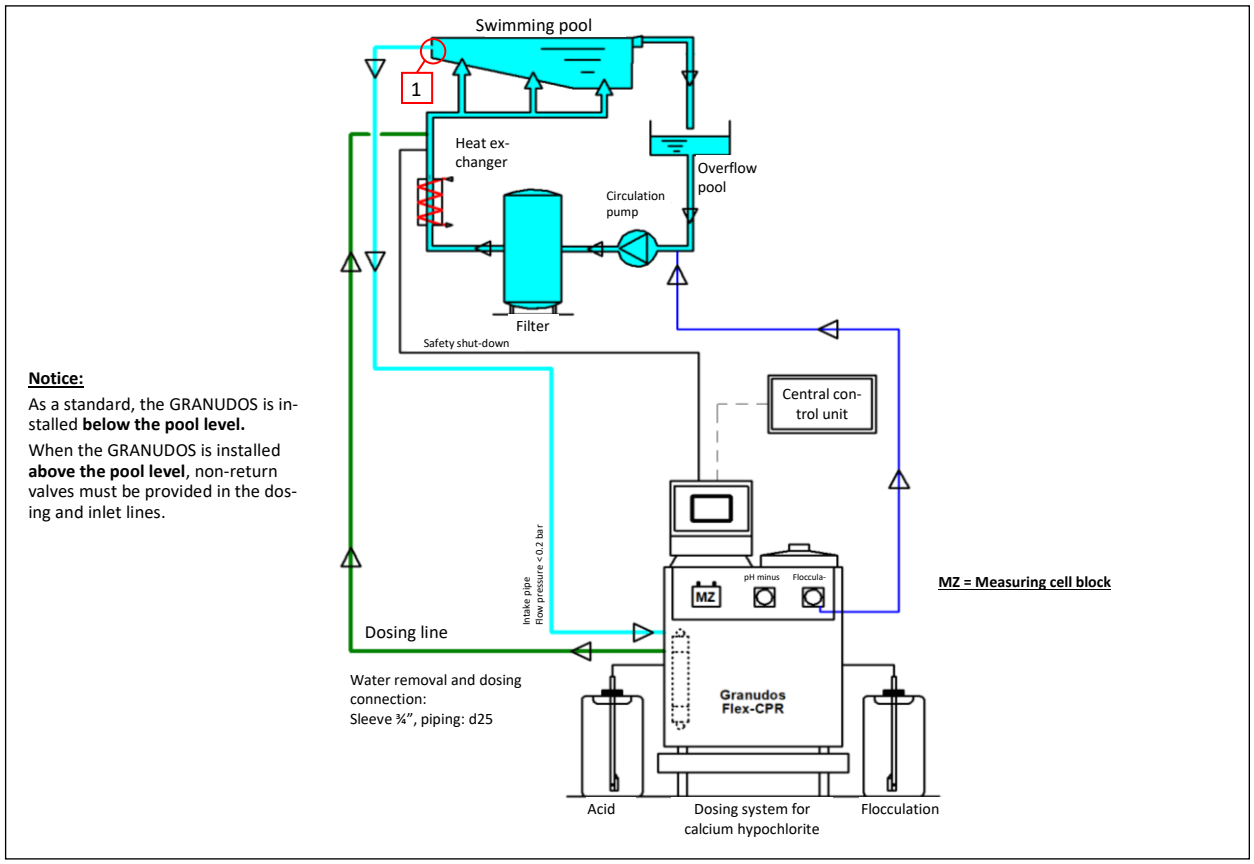

Figure 3: Flow diagram GRANUDOS Flex CPR Touch XL without buffer tank

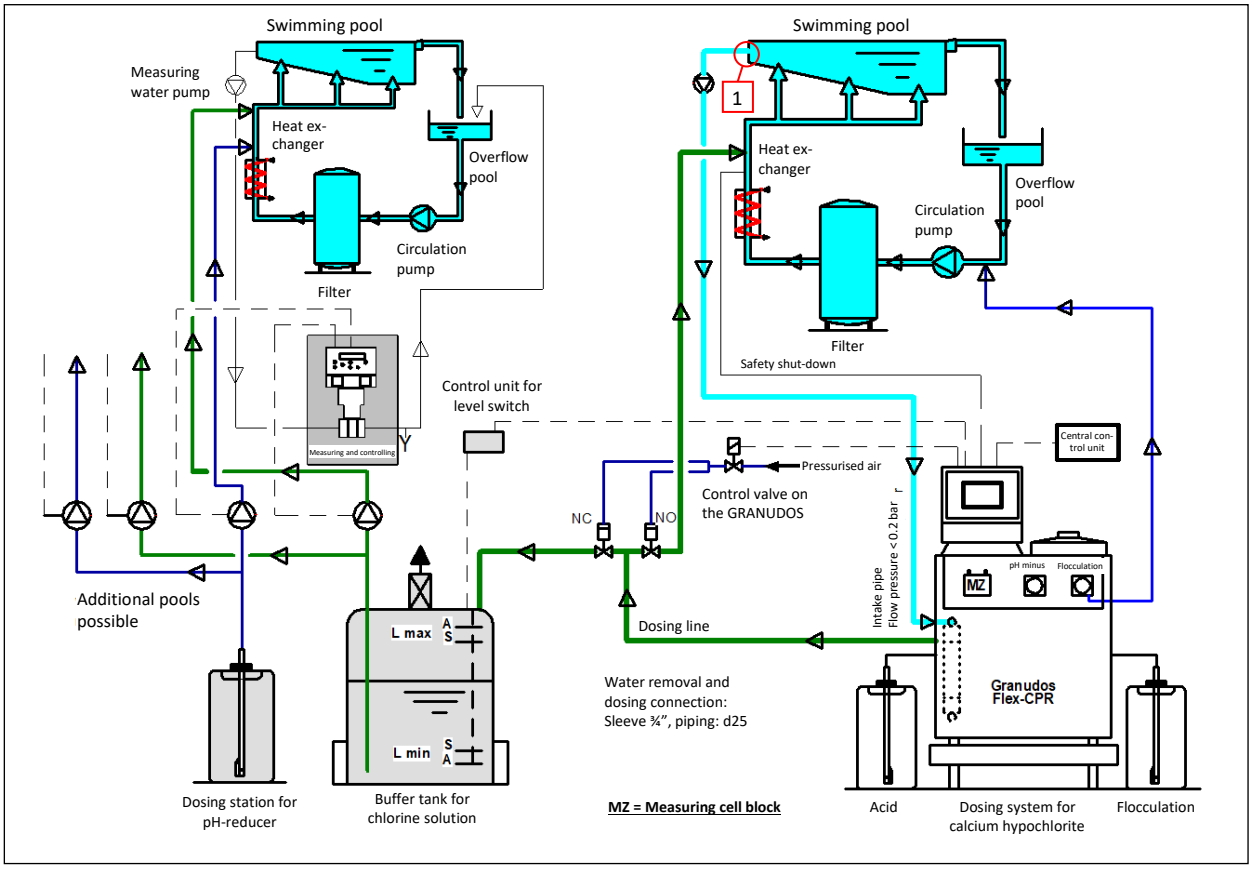

Figure 4: Flow diagram GRANUDOS Flex CPR Touch XL with buffer tank

3.2.2 Plastic housing with built-in components (standard)

Overview GRANUDOS Flex-CPR Touch XL and Flex-Touch dosing devices

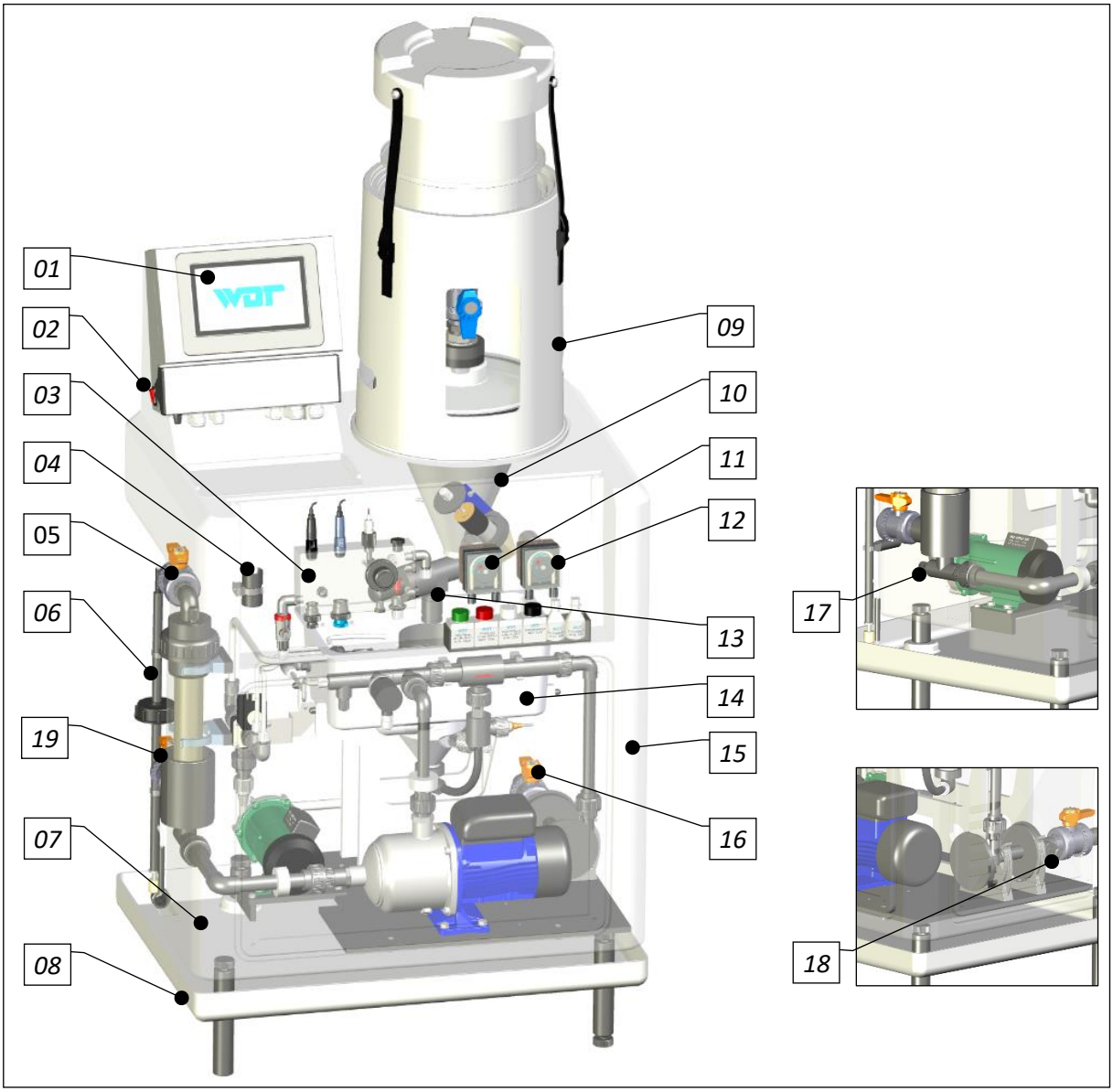

Figure 5: GRANUDOS Flex-CPR Touch XL and Flex-Touch with filling appliance

Key

01. Control unit	02. Main switch
03. Measuring cell block (only CPR Touch XL)	04. Bracket for redox test cylinder (only CPR Touch XL)
05. Ball valve inlet	06. Suction lance for pH-reducer (acid)
07. Housing	08. Collecting tub with drain (option)
09. Filling appliance (option)	10. Dosing hopper with lid
11. Dosing pump for pH-reducer (acid)	12. Dosing pump for flocculant (only CPR Touch XL)
13. Dosing unit for chlorine	14. Dissolving and flushing unit for chlorine granulate
15. Suction lance for flocculant (covered) (option)	16. Outflow to swimming pool
17. Manometer connection inlet	18. Manometer connection outflow
19. Flushing ball valve dirt filter	20. ---

Overview GRANUDOS Flex-S5 dosing device:

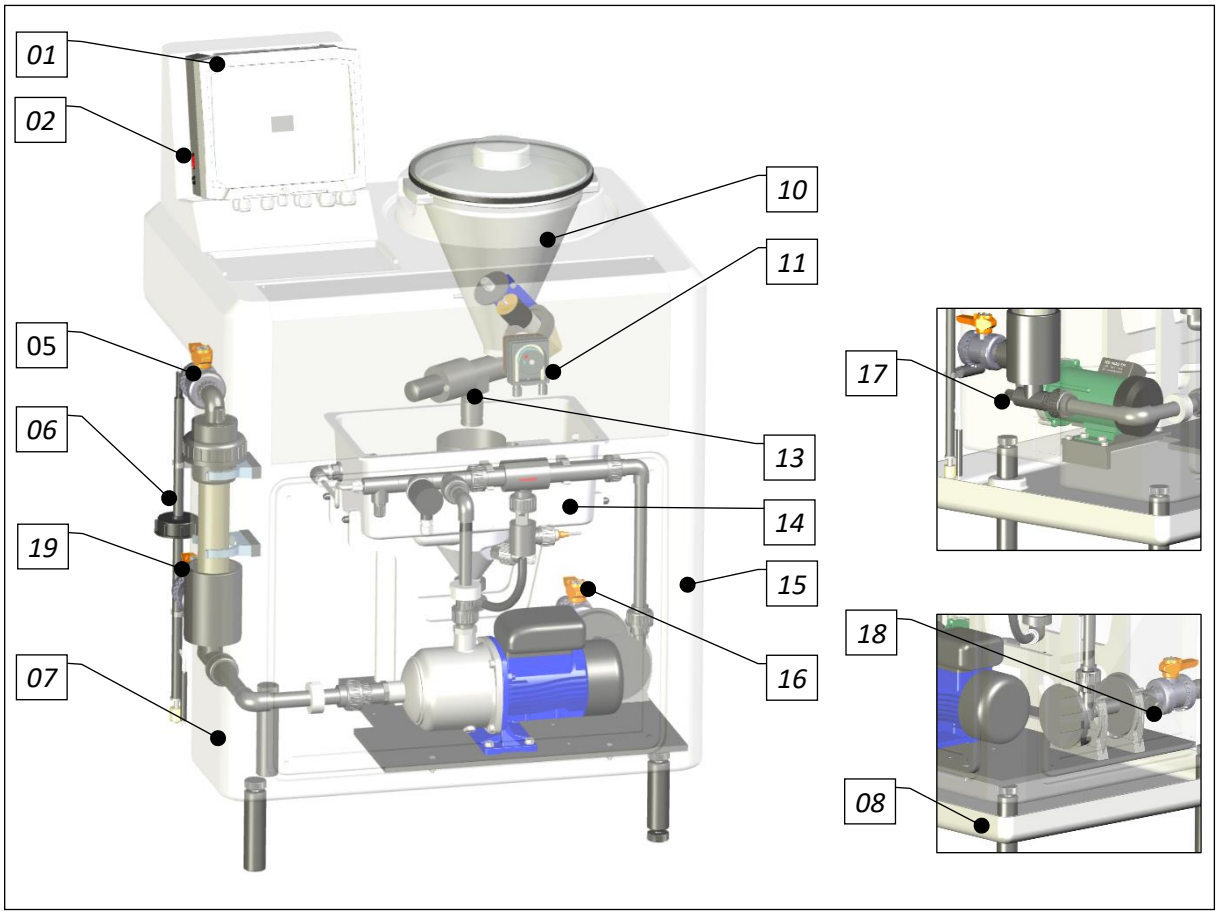

Figure 6: GRANUDOS Flex-S5

Description

The attractive housing *(07)* is sintered in one piece from light grey PE and is therefore extraordinarily stable. The dosing hopper (*10*) with a filling capacity of 5 or 15 kg is inserted into the housing from above and can thus be easily removed, e.g., for maintenance work. An optional filling appliance *(09)* is available, which allows a chlorine bucket to be placed on top. The dosing unit (*13*), consisting of a dosing motor with dosing screw and heated downpipe, is screwed into the bottom of the dosing hopper. The control unit (*01*) rests on top of the housing. The dosing hopper is protected against splashing water by a transparent lid. The bottom of the housing contains the dissolving and flushing unit (*14*) for the chlorine granulate.

3.2.3 Chlorine dosing (standard)

Overview chlorine dosing

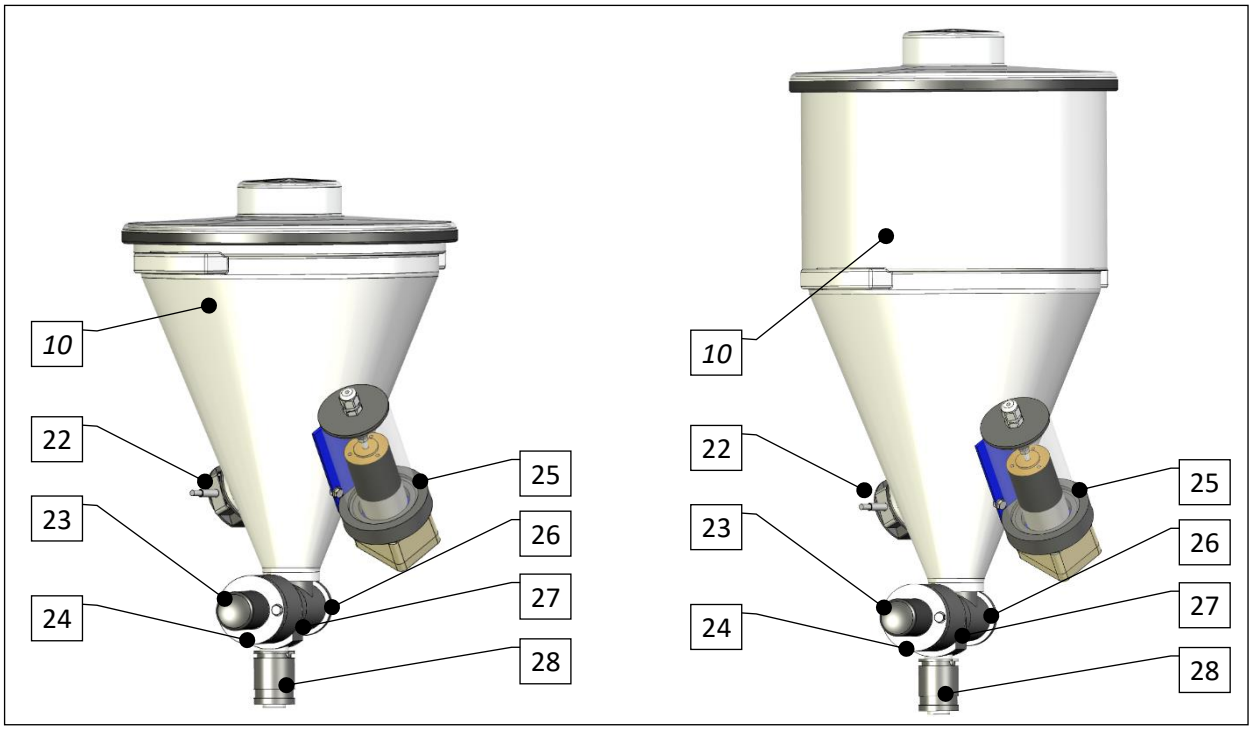

Figure 7: Dosing hopper 5 kg (standard) **Dosing hopper 15 kg (option)**

Key

10. Dosing hopper with lid	---
22. Chlorine empty switch (option)	23. Dosing motor
24. Motor bracket	25. Solenoid knocker (with connection socket)
26. Cleaning plug	27. Dosing screw (not visible)
28. Dosing pipe (with heater)	29. ---

Description

The chlorine dosing is controlled in alternating cycles with the acid and is monitored.

The illustrated dosing hopper (*10*) is attached inside the plastic housing and is used to dose the chlorine granulate into the dissolving and flushing unit (*14*).

The dosing appliance consists of the dosing hopper (*10*) with a capacity of approximately 5 kg or 15 kg and the dosing unit, which comprises the dosing motor (*23*) with flange, the dosing screw (27), the motor bracket (*24*) and the heated dosing pipe (*28*).

The heating of the dosing pipe prevents the condensation of water vapour, which could lead to a dosing blockage. The dosing unit is screwed into the bottom of the dosing hopper.

The dosing hopper is either closed tightly with the lid, or the filling appliance is used. With the filling appliance, a chlorine bucket can be placed directly on the dosing hopper, see Figure 5.

For maintenance work on the dosing, the dosing appliance is completely removed from the housing by lifting it upwards.

The dosing screw (*27*) transports the calcium hypochlorite granulate from the dosing hopper into the flushing pipe (*38*) of the underlying dissolving unit. A solenoid knocker (*25*) is installed for breaking up the chlorine granulate; during each dosing process, the solenoid knocker delivers a short blow to the dosing hopper, thus preventing the granulate from bridging across the dosing screw.

3.2.4 Dissolving unit (standard)

Overview Type Flex-CPR Touch XL dissolving unit

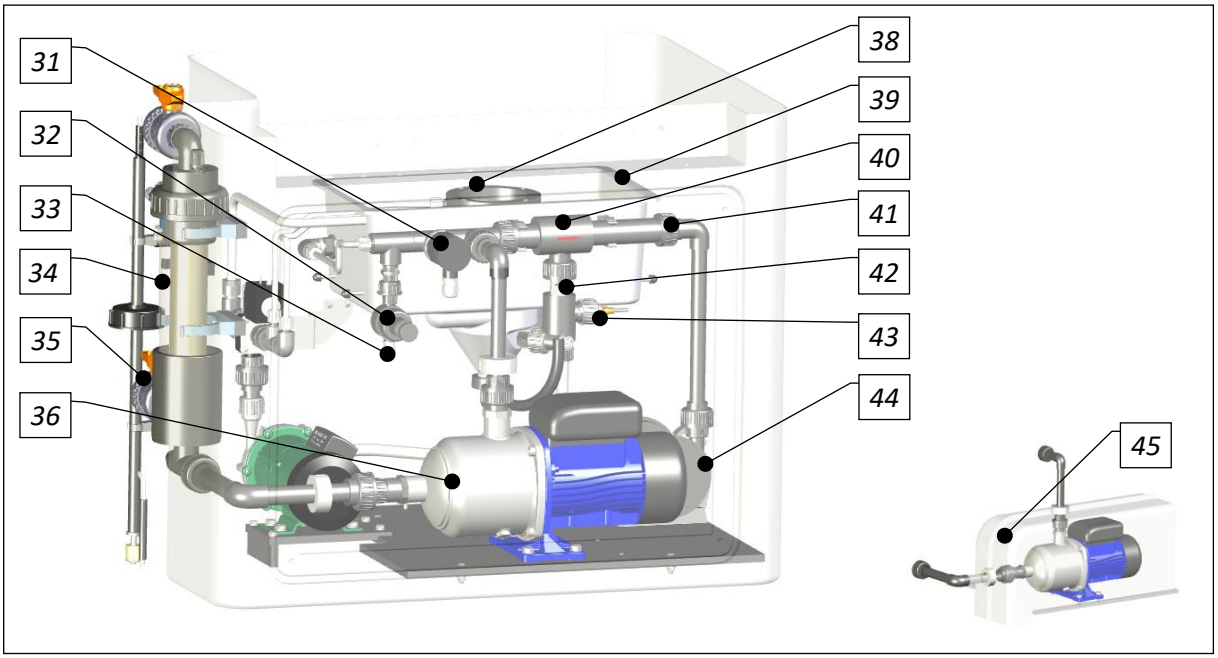

Figure 8, GRANUDOS dissolving unit

Overview GRANUDOS Type Flex-Touch and Type Flex-S5 dissolving units

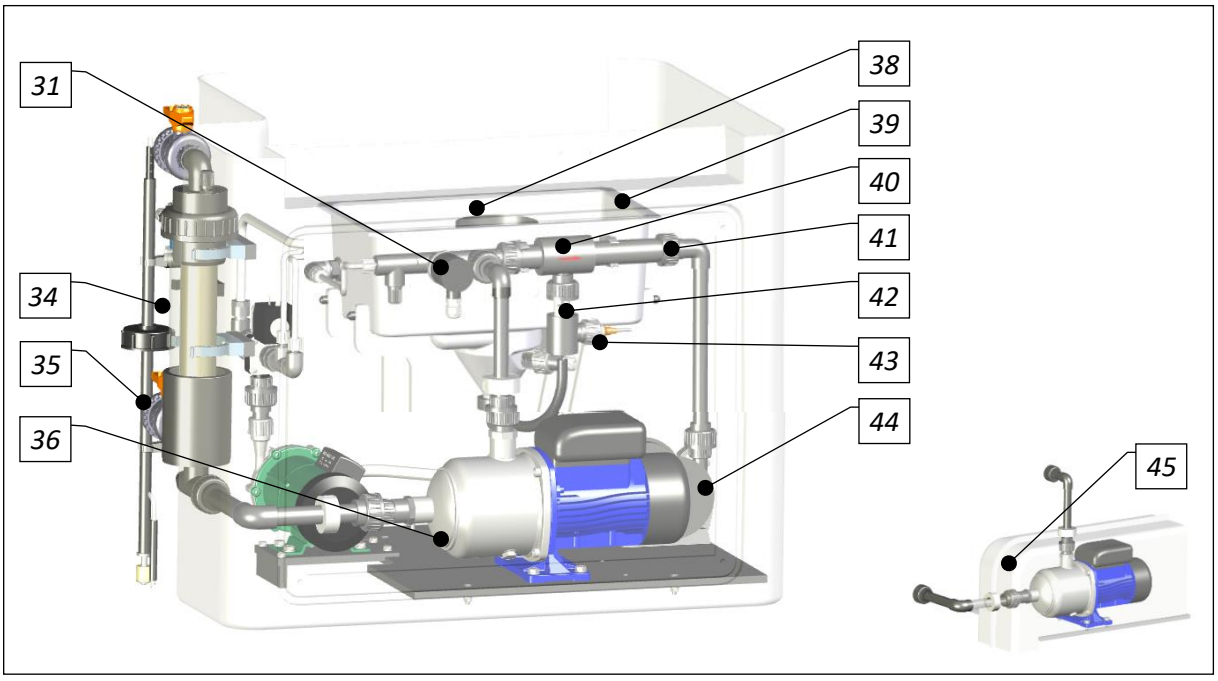

Figure 9, GRANUDOS dissolving unit

Overview flushing tub

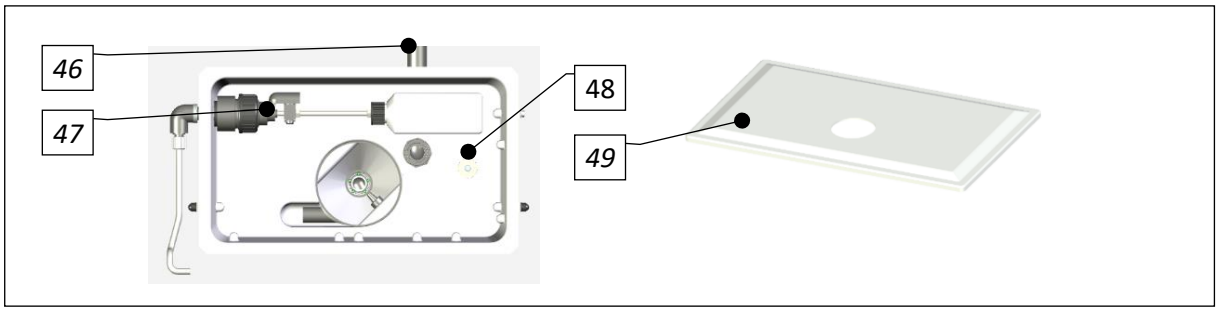

Figure 10, GRANUDOS Flex flushing tub

Key dissolving unit/flushing tub

31. Pressure switch	32. Pressure retention valve for supplying measuring cell block (only CPR Touch XL)
33. Outflow for supplying the measuring cell block (only CPR Touch XL)	34. Dirt filter d75 mm
35. Flushing connection for dirt filter	36. Booster pump; different designs
37. ---	38. Flushing pipe
39. Flushing tub	40. Injector
41. Pipe union with hole washer	42. Flow switch for suction pipe
43. Dosing valve for pH-reducer	44. Dissolving and mixing cyclone
45. Dust cover for booster pump	46. Flushing tub overflow
47. Floating valve inlet for flushing tub	48. Level switch min/max for flushing tub
49. Lid for flushing tub	50. ---

Description

The dissolving unit is installed on a base plate in the plastic housing and is used for the separate dissolving of the chemicals.

In the dissolving unit, the dissolving water originating from the swimming pool filter system is separated downstream of the booster pump *(36)*. A partial flow is directed to the injector. The other partial flow is directed into the flushing tub *(39)* via the floating valve *(47)*. From there, it is suctioned off by the injector *(40)*, together with the additional chemicals dosed in the flushing pipe *(38)*. The chlorine granulate and the pH-reducer (acid) are dosed in turns with intermittent breaks into the water flowing through the flushing pipe. Approx. 50% of the chlorine granulate is dissolved in the injector, the remainder is kept in circulation in the dissolving cyclone *(44)* until it also has been completely dissolved. Shortly after the dosing has started, the chlorine granulate can be seen in the cyclone.

Changes in the dissolving unit's water supply that cause the dissolving unit to no longer operate properly are recorded by the level switch *(48)*, the flow switch *(42)* and the pressure switch *(31)*. In these cases, the dosing of chemicals and also the booster pump, if applicable, will be turned off to prevent potential subsequent damage. For detailed information, see the separate Operating Instructions for the control unit:

- For GRANUDOS **CPR Touch XL**, Operating Instructions **"CPR-Touch XL Measuring and Control Unit"** No. **BA MR 001**.
- For GRANUDOS **Touch**, Operating Instructions **"GRANUDOS Touch Control Unit"** No. **BA SW 010**.
- For GRANUDOS **S5**, Operating Instructions **"GRANUDOS S5 Control Unit"** No. **BA SW 014**.

The pressure switch, installed on the pressure side of the booster pump, switches off the GRANUDOS in the event of a pressure drop or the intake of air to prevent the booster pump from running dry.

In addition, a control switch can be connected to turn off the dosing in the event of a fault in the swimming pool filter system, e.g., no flow in the clean water line.

In case of water-MIN and pure water contact, the dosing and the booster pump are switched off.

In case of water-MAX, the dosing is stopped and the booster pump continues to run.

A flow switch (*42*) is installed in the injector's suction line (*40*); this is of essential importance for the GRANUDOS's operational safety! If the injector's suction capacity is too low, the switch body that has been pushed upwards by the upward flow in the suction pipe, drops and the chemical dosing is turned off. This ensures that dosing only occurs in vigorously flowing water and the two chemicals cannot meet in the open area.

In the same way, the floating valve (*47*) blocks this inlet into the flushing tub in the event of a downtime or malfunction of the device. However, these actions cannot guarantee an absolute separation from the circulation circuit. If this is required, securely sealing shut-off valves must be installed in the inlet and dosing lines; either non-return valves or self-closing pneumatic valves, depending on the pressure situation. Pay attention to the pressure loss caused by the valves during operation.

The *Flushing tub* overflow *(46)* conducts the – nearly chlorine-free – excess water that occurs in case of the "water-max" fault to the drain.

The pressure retention valve (*32*) (only for CPR Touch XL) is used to supply the measuring cell block with a constant pressure and prevents the overflow of the flushing tub when no water is suctioned off. The pressure retention valve is preset ex works; however, it may have to be adapted to the local conditions during commissioning, if necessary.

To prevent the chlorine granulate and the acid from meeting and reacting with each other in the open part of the dissolving unit, the following safety package has been installed:

- The dosing of the two chemicals occurs in set cycles with pauses between the dosing processes. The power supply of the two dosing motors is locked via a relay system in such a way that **both motors can never be running at the same time**!
- The water supply and water flow are monitored by the pressure switch (*31*), level switch (*48*) and flow switch (*42*).
- Dosing only takes place when the water flow is ensured.
- In the event of deviation from the set target values (e.g., water-min/max, pressure flow, etc.) the dosing system is turned off and a corresponding fault indication is displayed.



ATTENTION!

The use of sulphuric acid is generally possible up to a concentration of 50%. With higher concentrations or when using other acids (e.g., hydrochloric acid, dissolved sodium hydrogen sulphate, etc.), pay attention to a change in dosing performance and/or increased corrosiveness! We recommend consultation with the manufacturer!

3.2.5 Acid dosing (standard)

Overview acid dosing

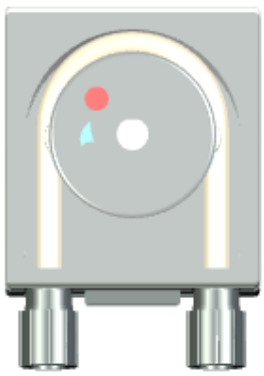

Figure 11: Acid pump

Description

The acid dosing in the GRANUDOS Flex is used to completely dissolve the chlorine granulate and to correct the pH value of the pool water. For each kg of chlorine granulate, approx. 0.5-1 litres of 37% sulphuric acid must be added. For this purpose, a peristaltic pump *(11, page12)* is installed as standard. The acid dosing is controlled automatically by the control unit.

Option with buffer tank:

For the filling of the buffer tank, the acid dosing must be adjusted. During commissioning, the chlorine dosing must be adjusted so that the chlorine solution in the buffer tank has a pH value between 6.8 and 7.2. In that case, the calcium hypochlorite solution is completely dissolved. The solution is practically clear and lacks a strong chlorine odour. If the pH value is too low, the solution has a strong chlorine odour and becomes more corrosive. If the pH value is too high, the solution is cloudy and precipitation or deposits form in the buffer tank and in the dosing lines. The correct dosing ratio is set by measuring the pH value. See the operating instructions for the respective control unit.

Peristaltic pumps are able to transport even the smallest dosing quantities reliably and evenly, even when air or gas bubbles are trapped in the suction line. Rotating rollers press the dosing hose against the housing wall, which pushes the liquid in the hose out in front of the rollers while simultaneously suctioning again behind them. The peristaltic pump is exceptionally reliable and easy to operate.

The peristaltic pump sucks the acid from the acid canister through the suction lance *(06, page 12)*. The fill level in the acid canister is determined with a level switch for the empty indication.

As a rule, sulphuric acid with a concentration of 37% is used as a pH-reducer.

When using hydrochloric acid, attention should be paid to the proper concentration and material resistance. For additional information, see the chapter Commissioning.

In solutions consisting of sodium hydrogen sulphite, the concentration must not be above 20% (approx. equivalent to 10% sulphuric acid). It must be considered whether the pump's circulation performance is sufficient for neutralisation because the sodium hydrogen sulphate has a lower acid capacity than sulphuric acid, for example.

3.2.6 Flocculant dosing (option), (only CPR Touch XL)

Overview flocculant dosing

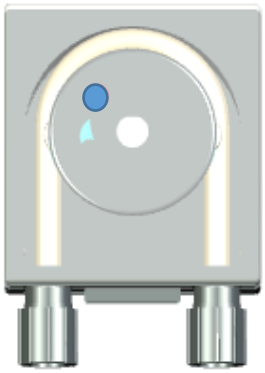

Figure 12: Flocculant dosing pump

Description

The flocculant is used to make the finest impurities from the swimming pool water, which are not retained by the swimming pool filter system, suitable for filtration.

The peristaltic pump *(12, page 12)* of the same design as for acid dosing is used for flocculant dosing, but it is rotation speed controlled and has a smaller hose diameter. The suction lance is used to suck the flocculant from the flocculant canister. The fill level in the canister is determined with a level switch for the empty indication.

3.2.7 Dust extraction (option)

Overview dust extraction

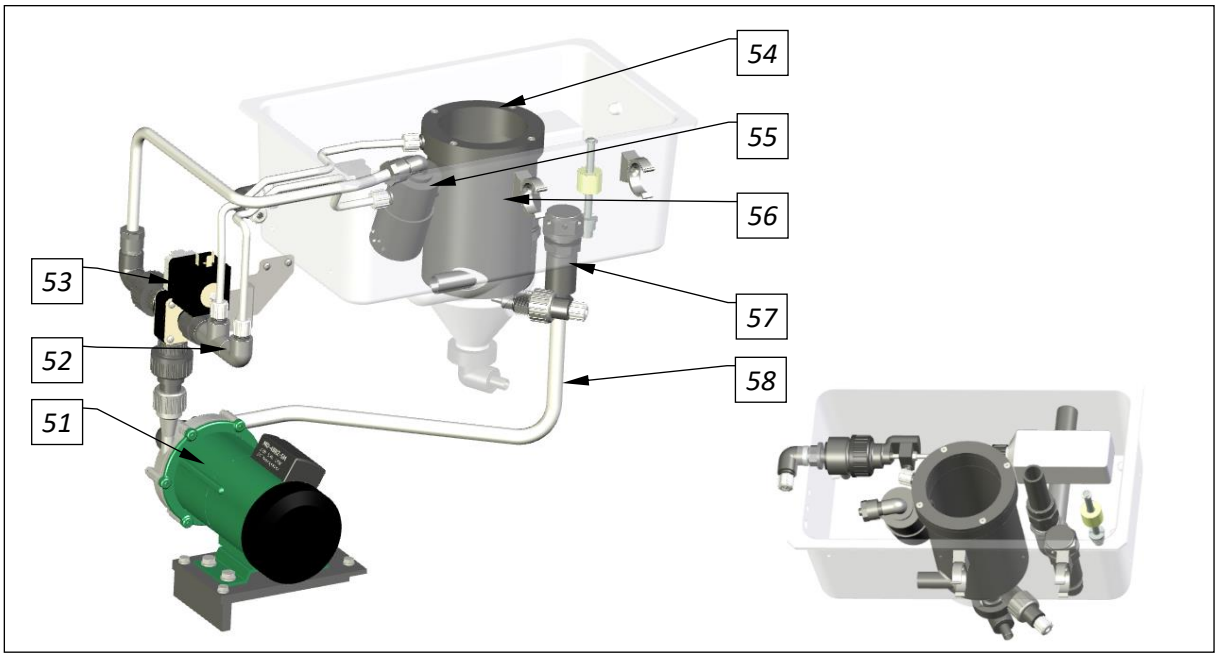

Figure 13: Dust extraction

Key dust extraction

51. Dust extraction pump	52. Flushing water distributor
53. Solenoid valve dust extraction	54. Flushing ring assembly group
55. Injector dust extraction	56. Flushing pipe dust extraction assembly group
57. Drain connection	58. Suction hose

Description

The dust extraction is used to reduce the amount of dust entering the environment. The use of granulates with a higher dust content may lead to a minor dust discharge at the device. This will subsequently settle on the protective cover and in the housing's interior. The dust extraction is based on the water jet nozzle (injector) principle.

The flushing of the dust extraction is used for the automatic cleaning of the flushing pipe and the dust extraction's injector. During operation, it is possible that **the chlorine dosing and the flushing are active simultaneously**. This constitutes a **normal operating state**.

The flushing interval is controlled via the control unit. This is preset ex works to 10 s flushing and 1 h pause.

3.2.8 Buffer tank with/without collecting tub (only for CPR Touch XL and Touch) (option)

Overview buffer tank

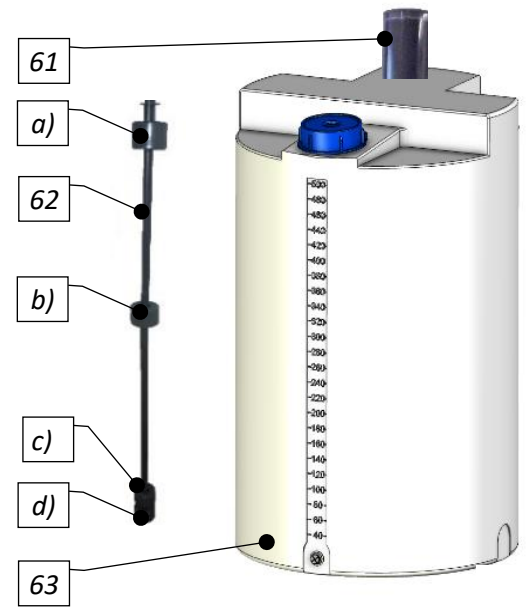

Figure 14: Buffer tank

Key buffer tank

61. Activated carbon filter
62. 4-fold level switch a) Maximum level alarm; b) Maximum level; stop filling c) Minimum level; start filling d) Minimum level alarm;
63. Buffer tank 300 l PE
64. Collecting tub buffer tank (not shown)
65. Alarm switch for collecting tub buffer tank, (not shown)

Description

1. When the buffer tank's lower control level "Start filling" is reached, the solenoid valve to the swimming pool filter system closes and the solenoid valve for buffer tank filling opens. Buffer tank filling starts.
2. At the buffer tank's upper control level "Stop filling", the filling is stopped. This is followed by a flushing cycle to clean the dissolving unit: initially for 20 seconds with acid, followed by 20 seconds with water only. Afterwards, the solenoid valves switch back to normal operation.
3. At the buffer tank's "Minimum alarm" level, the dosing pump(s) are switched off. An alarm message is shown on the display; the alarm output is active.
4. At the buffer tank's "Maximum alarm" level, an alarm message is shown on the display. The dosing pump(s) continue(s) running.

Contact positions

When the container is half full, the level switches' contacts are set as follows:

Level position →	**Contact**
• Maximum level alarm →	closed
• Maximum level →	open
• Minimum level alarm →	open
• Minimum level →	open

An activated carbon filter *(61)* is screwed on top of the buffer tank. It is used to clean the chlorine-containing air when filling the buffer tank and for venting and aerating.

The buffer tank is located in the collecting tub. An alarm switch *(65)* for leakages is installed in the collecting tub.

3.2.9 Filling appliance (option)

Overview filling appliance

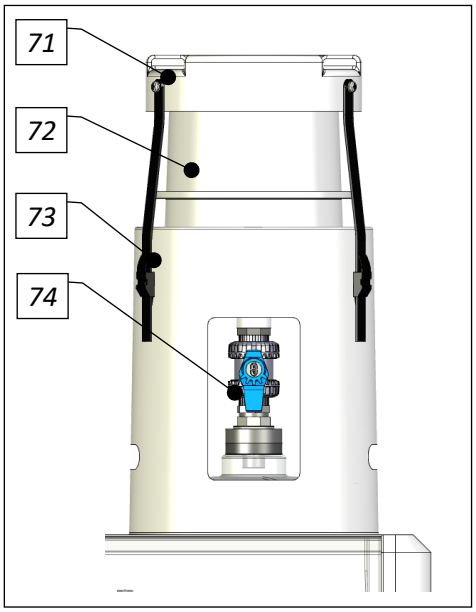

Figure 15: Filling appliance

Key filling appliance

71. Lid of filling appliance with tension bands
72. Granulate bucket
73. Filling appliance attachment with clamping levers
74. Shut-off with nozzle

Description

The filling appliance facilitates the filling of the GRANUDOS with chlorine granulate when using chlorine buckets. The filling appliance can also be used as a shelf for the dosing hopper for maintenance purposes (see *Chapter 7.1.2* or *Chapter 5.2.4.2*).

3.2.10 GRANUDOS control unit

The operation of the control unit is described in a separate set of operating instructions.

- For **GRANUDOS CPR Touch XL**, control unit, see Operating Instructions **“GRANUDOS CPR Touch XL Measuring and Control Unit”**, No. **BA MR 001**.
- For **GRANUDOS Touch** control unit, see Operating Instructions **“GRANUDOS Touch Control Unit”**, No. **BA SW 010**.
- For **GRANUDOS S5** control unit, see Operating Instructions **“S5 Control Unit”**, No. **BA SW 014**.

3.3 Identification of the device/ Identification plate

The identification plate sticker is located on the side of the control housing.

TIP!

Keep the identification plate clean and in a legible condition!

Enter the data from your device's identification plate here.

Field 1: Enter code number

Field 2: Enter serial number

Field 3: Enter date of manufacturing

Identification plate GRANUDOS FLEX-CPR Touch XL

Typ:GRANUDOS FLEX-CPR-Touch ...
Art.:_____ Serien Nr.:_____
230V/AC 1Ph~ 50Hz Imax. 3,15 A
Dosierleistung Cl 0,5kg/h pH 1 l/h
Herstellung __.__._____
WDT - Werner Dosiertechnik GmbH & Co. KG
Hettlinger Str. 17
D-86637-Wertingen

Identification plate GRANUDOS FLEX-Touch

Typ: GRANUDOS Flex-Touch ...
Art.:_____ Serien Nr.:_____
230V/AC 1Ph~ 50Hz Imax. 3,15 A
Dosierleistung Cl 2,0 kg/h- pH 1 l/h
Herstellung __.__._____
WDT - Werner Dosiertechnik GmbH & Co. KG
Hettlinger Str. 17
D-86637-Wertingen

Identification plate GRANUDOS FLEX-S5

Typ: GRANUDOS Flex-S5 ...
Art.:_____ Serien Nr.:_____
230V/AC 1Ph~ 50Hz Imax. 3,15 A
Dosierleistung Cl 2,0 kg/h- pH 1 l/h
Herstellung __.__._____
WDT - Werner Dosiertechnik GmbH & Co. KG
Hettlinger Str. 17
D-86637-Wertingen

3.4 Technical data

	GRANUDOS Flex-CPR Touch XL	GRANUDOS Flex-Touch
Dimensions and weights		
Dimensions	W 800 mm, H 1300 mm, D 600 mm	
Space requirement, including operation and maintenance	W 1600 mm, H 2100 mm, D 1450 mm	
Empty weight / operating weight	approx. 40 kg/60kg	approx. 35 kg/60kg
Connection data		
Electrical connection data	230 V AC/50 Hz ± 10%, 600 W, I max. 3.15 A, safety plug	
Fuse front panel	6.3 At	
Hydraulic connection data	Inlet d32, outflow d25 Overflow dissolving unit d25 Drain collecting tub d32/40	
Pneumatic connection data	at least 5 bar permanently	
Required duct connection	At least d32	
Protection class	IP54	
Operating pressure Required inlet pressure Counter-pressure	Flow pressure min. 0.2 bar 0 - 1.5 bar (depending on inlet pressure) In case of higher counter-pressures, consult with WDT max. 2.5 bar	
Dissolving water supply	Removal from swimming pool using booster pump; In exceptional cases: In exceptional cases: Removal between circulation pump and swimming pool filter, before chemical dosing using booster pump; flow pressure min. 0.2 bar	Removal between swimming pool filter and heat exchanger; before chemical dosing using booster pump; In exceptional cases: Removal between circulation pump and the swimming filter, before chemical dosing with booster pump; flow pressure min. 0.2 barg
Operating data		
max. dosing performance	Chlorine: • with motor PLG30-12; approx. 0.5 kg/h (1, 3) • with motor PLG30--35; approx. 2k g/h (1) Acid: max. approx. 1.3 l/h (2) Flocculant: max. 50 ml/h	Chlorine: • with motor PLG30-12; approx. 0.5k g/h (1) • with motor PLG30--35; approx. 2 kg/h (1, 3) Acid: max. approx. 1.3 l/h (2)
Water flow / filling capacity	approx. 1000 l/h	
Booster pump	Lo.: 390 W, 230 V, 1.95 A; Cal.: 330 W, 230 V 2.5 A	
Medium temperature Ambient temperature Humidity technical room	0°C to 40°C 5°C to 35°C Max: 70%	
Hypochlorous acid concentration	max. 0.2%	
Other data		
Room ventilation (in and out)	According to the locally applicable provisions, e.g., for Germany DIN 19643-1 ventilation mandatory	
Material	Housing: Sintered PE Other functioning parts: PVC or PE Seals: EPDM, Viton	

Footnotes regarding the technical data

(1) The dosing performance for the chlorine granulate depends on the type of granulate: In case of a high dust content in the granulate or with very coarse materials > 3 mm or elongated grains, the dosing performance may be significantly reduced. If the maximum dosing performance is required, a granulate with a low dust content must be used.

(2) This performance is required for neutralisation with a high chlorine dosing performance, using 37% sulphuric acid.

(3) Standard design

All pressure specifications refer to the atmospheric pressure barg.

	GRANUDOS Flex-S5	Buffer tank GRANUDOS-PB (option) for CPR Touch XL + Touch
Dimensions and weights		
Dimensions	W 800 mm, H 1300 mm, D 600 mm	D 800 m, H 1300 mm
Space requirement, including operation and maintenance	W 1600 m, H 2100 m, D 1450 m	W 900 m, H 2100 m, D 1700 m
Empty weight / operating weight	approx. 40 kg/60kg	10/210 kg (200 l) 15/315 kg (300 l)
Connection data		
Electrical connection data	230 V AC/50 Hz ± 10%, 600 W, I max. 3.15 A, safety plug	---
Fuse front panel	6.3 At	
Hydraulic connection data	Inlet d32, outflow d25 Overflow dissolving unit d25 Drain collecting tub d32/40	Inlet d25 Outflow d20 (suction lance)
Pneumatic connection data	---	at least 5 bar permanently
Required duct connection	At least d32	---
Protection class	IP54	---
Operating pressure Required inlet pressure Counter-pressure	max. 2.5 bar min. 0.2 bar 0 - 1.5 bar (depending on inlet pressure) In case of higher counter-pressures, consult with WDT	Pressureless
Dissolving water supply	Removal between swimming pool filter and heat exchanger before chemical dosing using booster pump In exceptional cases: Removal between circulation pump and swimming pool filter, before chemical dosing , using booster pump; flow pressure min. 0.2 bar	----
Operating data		
max. dosing performance	Chlorine: • with motor PLG30-12; approx. 0.5k g/h (1) • with motor PLG30--35; approx. 2 kg/h (1, 3) Acid: max. approx. 1.3 l/h (2)	---
Filling volume	---	200 l/300 l
Water flow / filling capacity	approx. 1000 l/h	---
Booster pump	Lo.: 390 W, 230 V, 1.95 A; Cal.: 330 W, 230 V 2.5 A	---
Medium temperature Ambient temperature Humidity technical room	5°C to 35°C 5°C to 35°C Max: 70%	
Hypochlorous acid concentration	max. 0.2%	
Other data		
Room ventilation (in and out)	The locally applicable provisions must be observed, e.g., DIN 19643 for Germany	
Material	Housing: Sintered PE Other functioning parts: PVC or PE Seals: EPDM, Viton	Container: PE Connections: PVC

Footnotes regarding the technical data

(1) The dosing performance for the chlorine granulate depends on the type of granulate: In case of a high dust content in the granulate or with very coarse materials > 3 mm or elongated grains, the dosing performance may be significantly reduced. If the maximum dosing performance is required, a granulate with a low dust content must be used.

(2) This performance is required for neutralisation with a high chlorine dosing performance, using 37% sulphuric acid.

(3) Standard design

All pressure specifications refer to the atmospheric pressure barg.

3.4.1 Requirements for the calcium hypochlorite granulate

Description

Based on the experience gained in the past 30 years with the dosing of calcium hypochlorite granulate using the GRANUDOS system, we discovered that the quality of the granulate has a significant impact on the dosing's functional safety. Here, we define our minimum requirements for the calcium hypochlorite granulate. If these quality criteria are met, a proper dosing operation can be assumed.

The following can be checked upon delivery to gain an initial impression of the quality:
The granulate must be white, free of clumps, and no strong chlorine odour must be present when opening the drum.

Specification (recommendation by WDT, for minimum requirements, see EN 900)

- Calcium hypochlorite concentration: → higher than 70%
- Water-insoluble components ($Ca(OH)_2$, $CaCO_3$): → less than 4%
- Mass fraction water (crystal water): → higher than 10%
- Dust grain size: → smaller than 0.15 mm (100 mesh) and content less than 1%
- Grain size of coarse particles: → larger than 2.5 mm (8 mesh) and content less than 5%

3.5 Transport and storage

3.5.1 General notices, a separate position for the warning notice?

ATTENTION!



The systems and devices can be damaged by frost or high temperatures. Avoid exposure to frost during transport and storage!

Do not store systems and devices next to objects with strong heat emission or in direct sunlight. The device may only be transported and stored in its original packaging. Please ensure careful handling.

Please check the devices immediately upon receipt for potential transport damage.

3.5.2 Storage of chemicals

DANGER!



The handling of chemicals involves dangers, which if disregarded, will lead to serious or life-threatening injuries or death! Please pay attention to the chemicals manufacturers' safety data sheets!

In addition, please pay attention to the provision regarding the storage of chemicals TRGS 510.

General

- Store chlorine dry and cool
- Keep a chlorine supply at hand for less than 6 months
- Use suitable collecting tubs
  In Germany: for an individual volume of more than 20 litres, a building authority approval is required

4 Installation

4.1 Select the installation site

NOTICE!

Please pay attention to the following notices regarding the selection of the installation site:

- **A freely accessible place of installation should be selected to facilitate operations and subsequent maintenance tasks.**
- **Comply with the dimensions for the floor drain and the temperature specifications for the ambient air and medium in accordance with the provisions in *Chapter 3.4,* on *page 22.* No flammable vapours, dust or gases may be present in the immediate vicinity of the device.**
- **The device must not be exposed to the elements. It may not be installed outdoors. The system must be protected from frost and direct sunlight.**
- **An electricity grid connection and a drain connection must be available.**
- **The installation site must comply with the locally applicable accident prevention regulations (from the German Accident Prevention Regulation DGUV 107-001) and should not be accessible to unauthorised persons.**
- **It must be possible to vent and aerate technical areas so that hazardous substances do not occur in health-hazardous concentrations (from the German Accident Prevention Regulations DGUV 107-001).**
- **A separate storage space must be available for the chemicals.**
- **Collecting tubs must be available for the chemical containers and the buffer tank (option).**

4.2 Installation instructions / installation suggestion

- Remove transport safety devices
- Attach warning and notice signs in accordance with the locally applicable accident prevention regulations (Germany: DGUV 107-001) at the designated positions.

NOTICE!

The standard GRANUDOS booster pump is **not suitable for saline water (seawater/brine pools)**. A special version is available for this case. Pay attention to this when placing your order!

4.2.1 Suggested installation

Suggested installation GRANUDOS Flex without buffer tank:

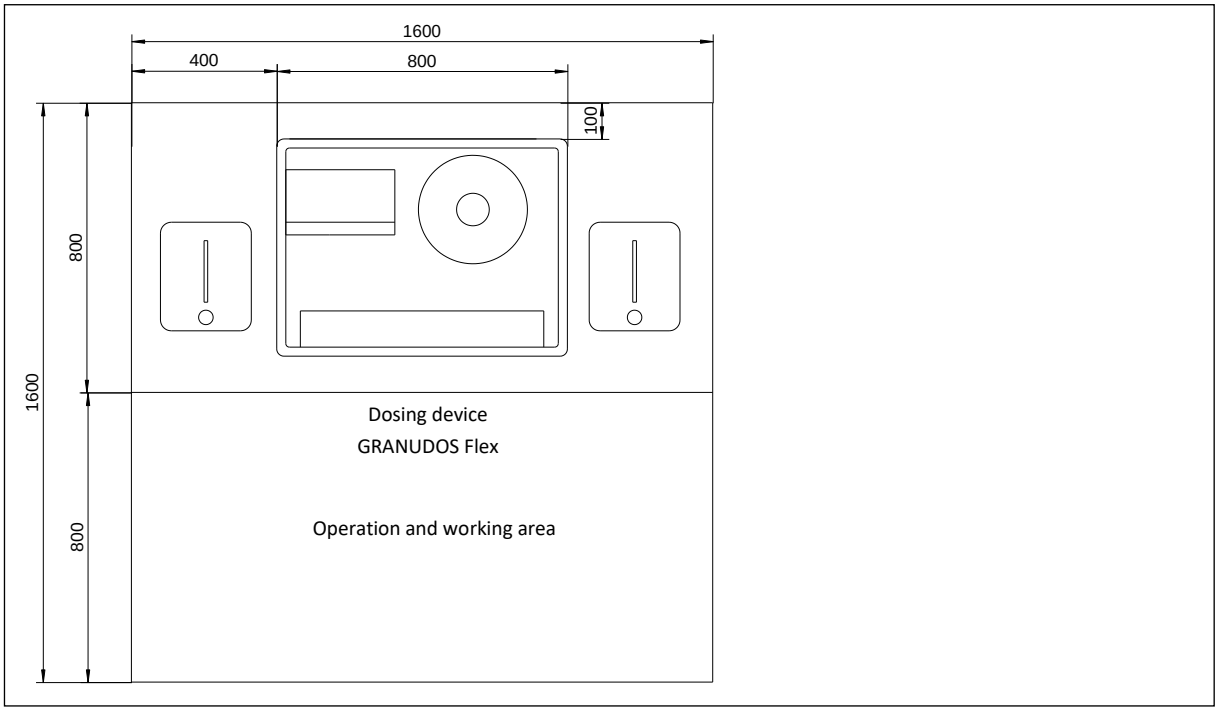

Figure 16: Suggested installation, including space requirements without buffer tank

Suggested installation GRANUDOS Flex with buffer tank:

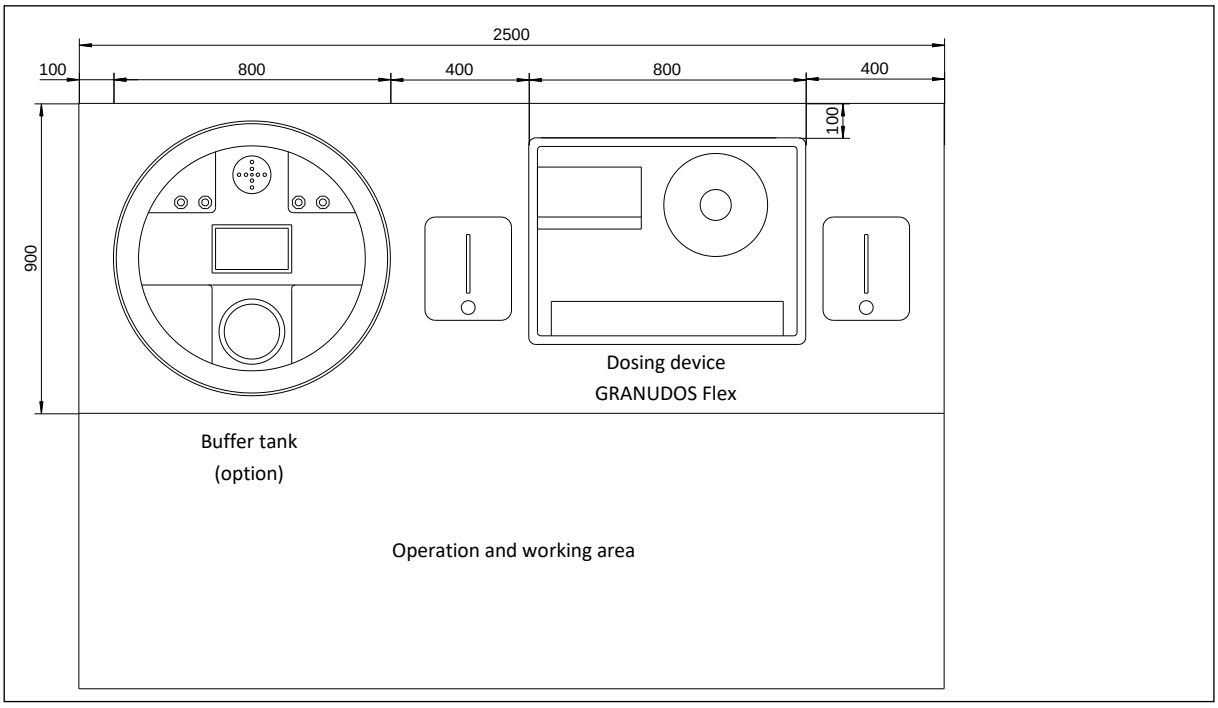

Figure 17: Suggested installation, including space requirements with buffer tank

4.3 Mechanical installation

The GRANUDOS is delivered completely pre-assembled, including the control unit, the dirt filter and the collecting tub (option), and is thus ready for installation.

4.3.1 GRANUDOS Flex installation

Procedure

a) Unpack the GRANUDOS and set it up and align it on a suitable, level foundation in the technical room.
b) Proceed in the same way with the dosing canisters, the buffer tank (option) and the corresponding collecting tubs.
c) Ensure that there is sufficient clearance for operating and servicing the device!

Installation materials	
	Spare parts bag with manometer and hole washers with 5.5 and 7 mm drill hole
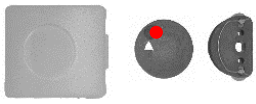	Accessories for acid pump
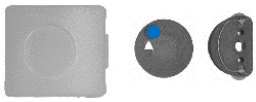	Accessories for flocculant pump (option)
	Dosing valve type 1Sk (option)

4.3.2 Buffer tank installation

The buffer tank may only be operated with a suitable collecting tub. (Possibly a collecting tub provided On-site.)

Procedure

a) Place and align the collecting tub on a suitable, level foundation in the technical room.
b) Place the empty buffer tank in the collecting tub and check for secure footing.
c) Ensure that there is sufficient clearance for operating and servicing the device.

4.4 Hydraulic installation

NOTICE!

When using Captura swimming pool filters, an automatic vent must be installed in the swimming pool water cycle. Otherwise, fault may occur in the GRANUDOS system. For more detailed coordination, please contact WDT.

Integration into the water circulation: **Flex-Touch and Flex-S5 without buffer tank**

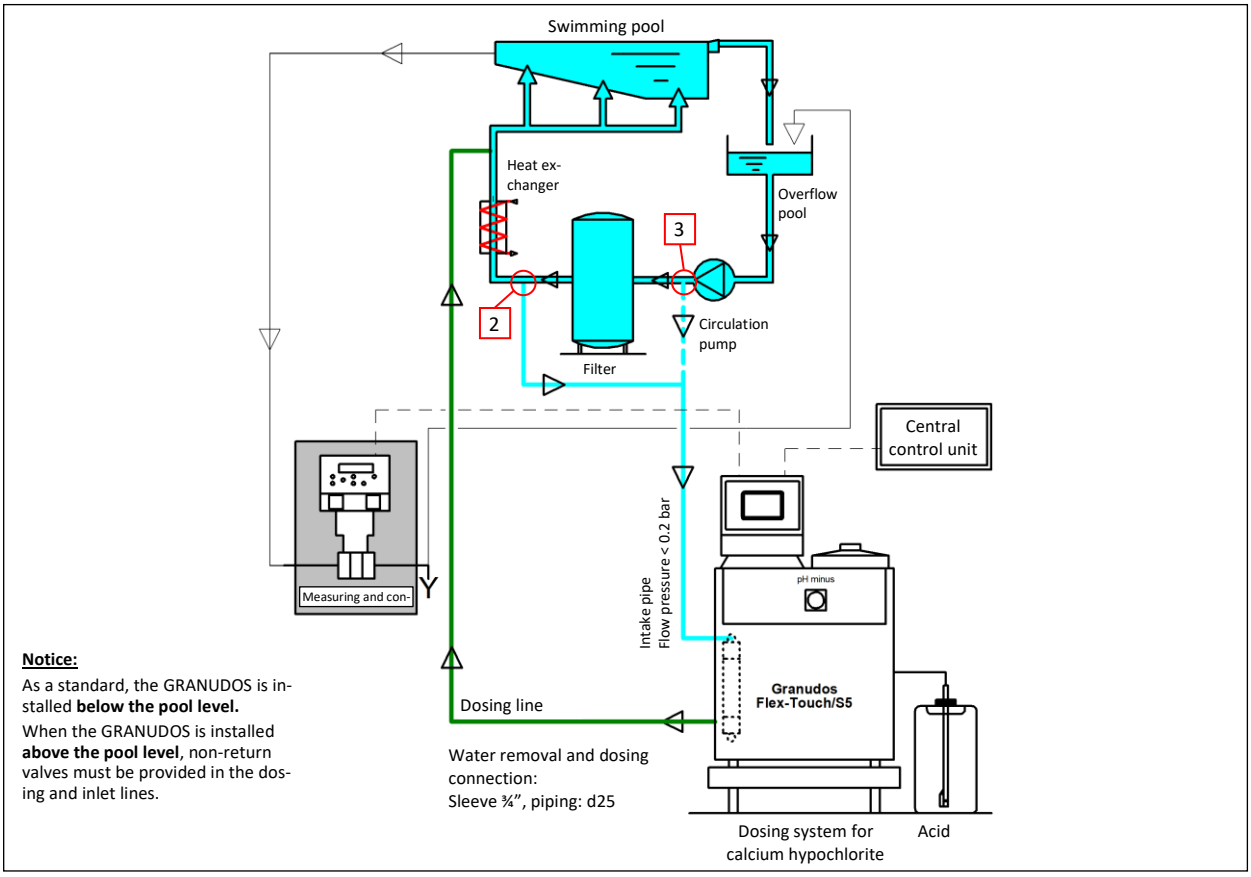

Figure 18: Flow diagram GRANUDOS Flex-Touch and Flex-S5, without buffer tank

Integration into the water circulation: **Flex-Touch with buffer tank**

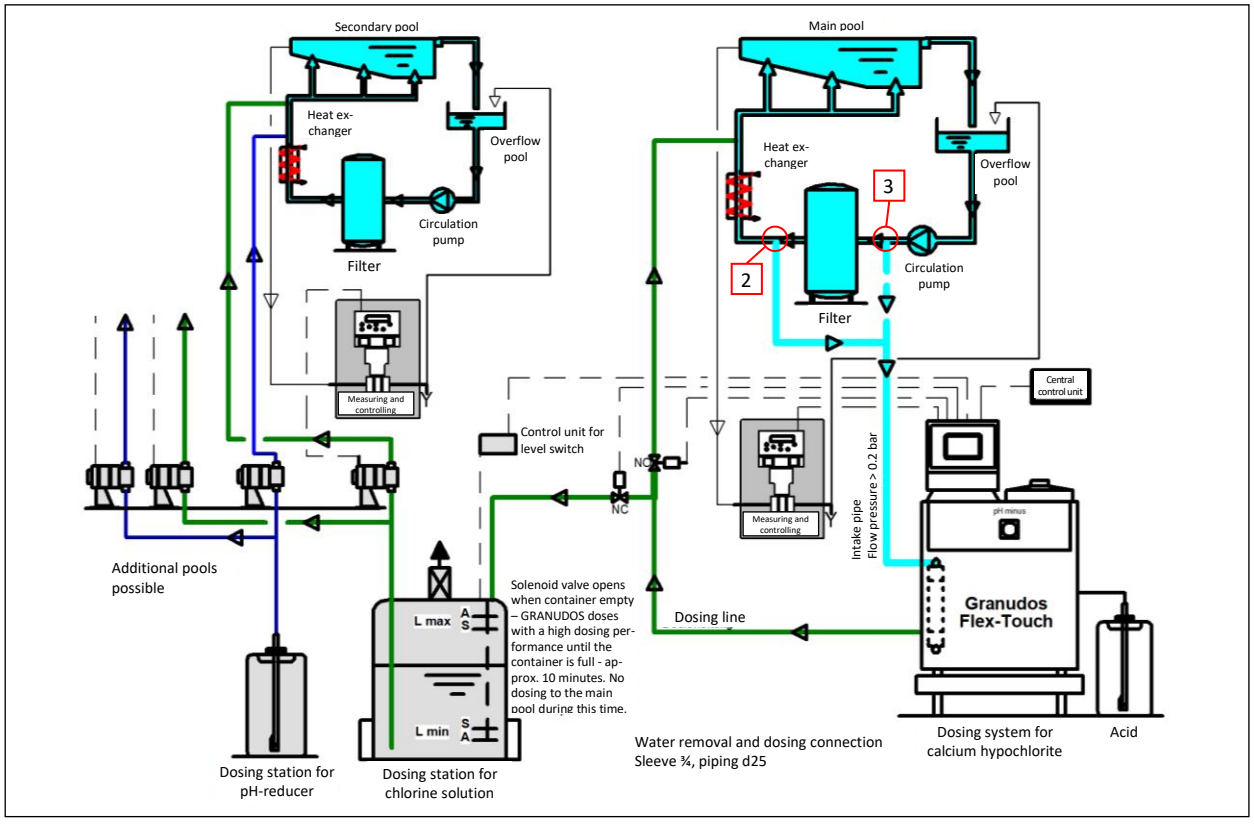

Figure 19: Flow diagram GRANUDOS Flex-Touch with buffer tank

Integration into the water circulation: Flex-CPR Touch XL without buffer tank

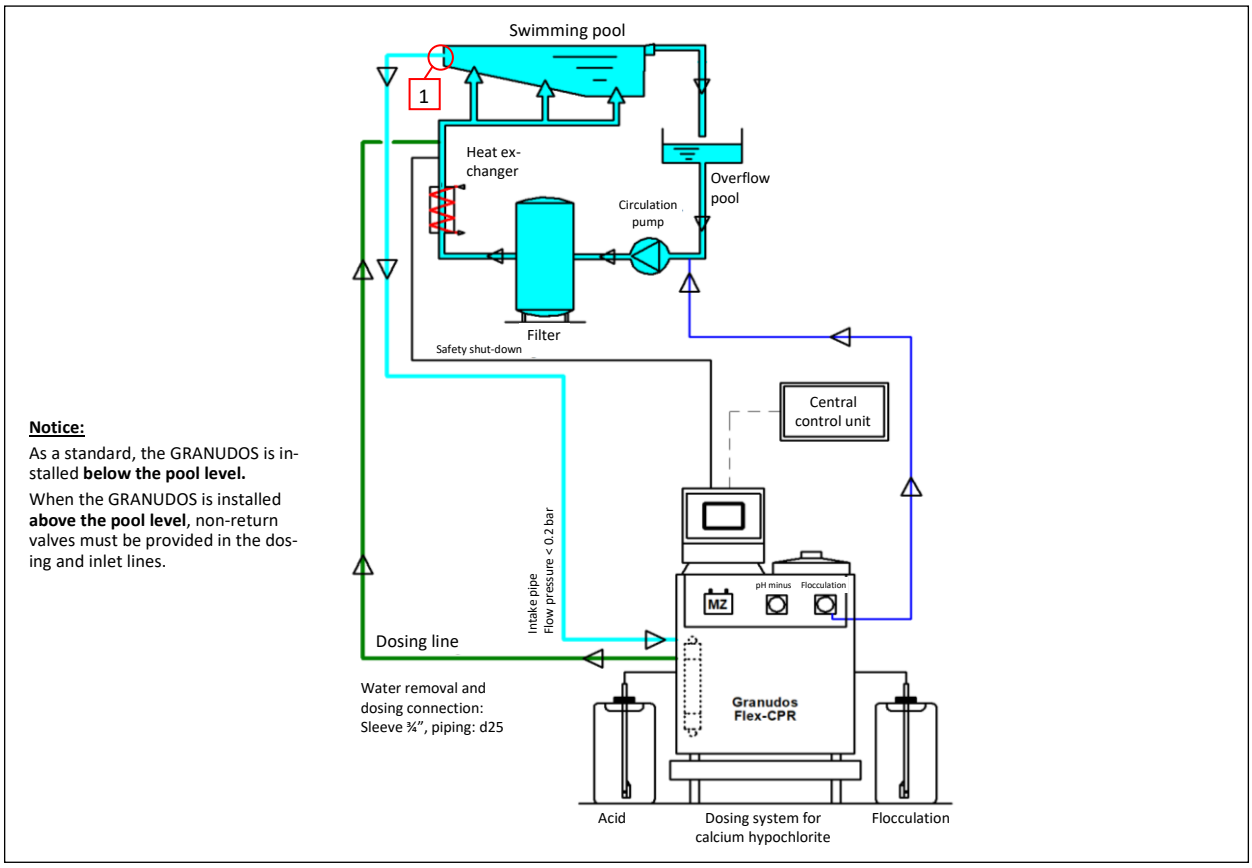

Notice:

As a standard, the GRANUDOS is installed **below the pool level.**

When the GRANUDOS is installed **above the pool level**, non-return valves must be provided in the dosing and inlet lines.

Figure 20: Flow diagram GRANUDOS Flex-CPR Touch XL without buffer tank

Integration into the water circulation: **Flex-CPR Touch XL with buffer tank**

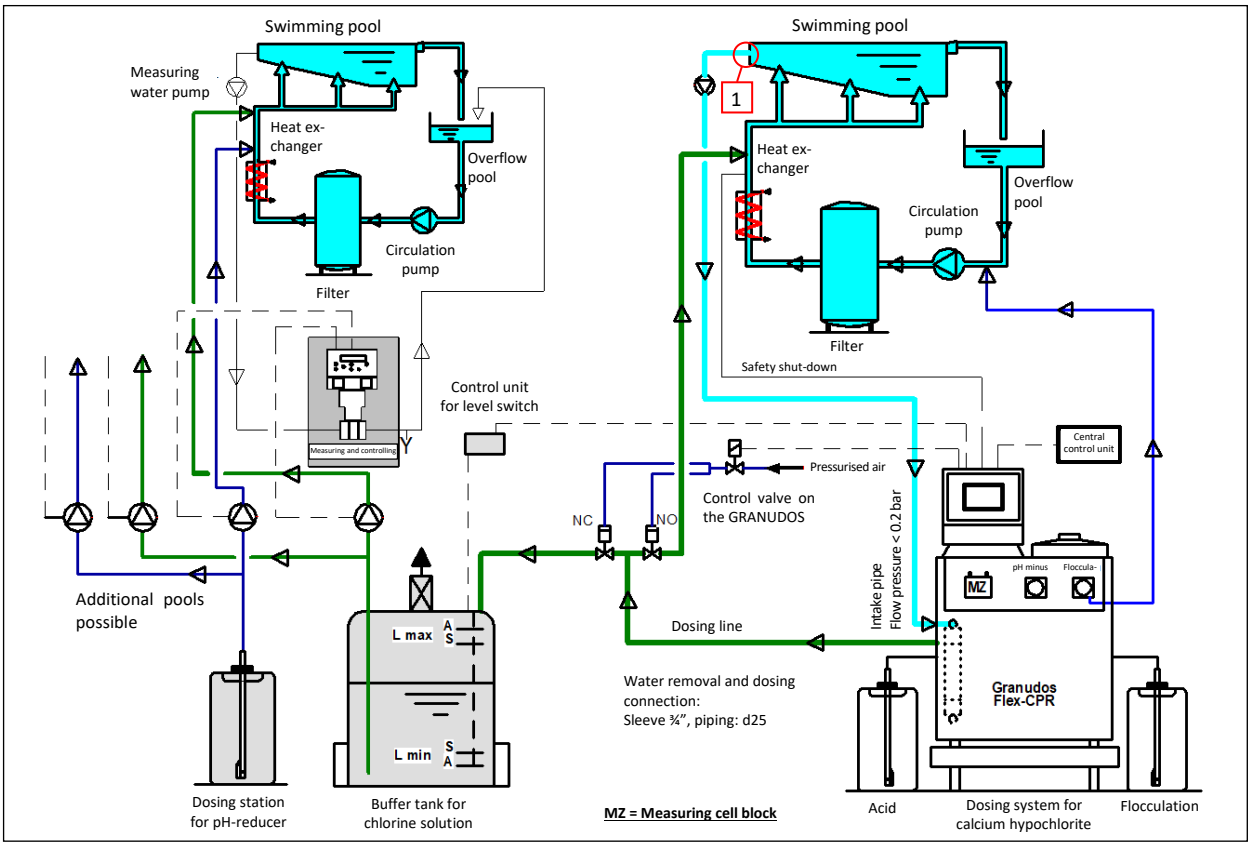

Figure 21: Flow diagram GRANUDOS Flex-CPR Touch XL with buffer tank

CAUTION!

During installation, the locally applicable provisions must be observed. In Germany, for example, DIN 19643.

During all installation work, the valves must be closed and the lines depressurised to prevent injury and damage.

Pressure conditions

When connecting the GRANUDOS to the swimming pool circulation, particular attention must be paid to the pressure conditions. The swimming pool circulation should have no impact on the supply of dissolving water to the GRANUDOS.

The table shows the maximum possible counter-pressures at the dosing point at the prevailing inlet pressure. The values in the table refer to the **flow pressure, i.e., the dynamic pressure** in the line.

Conditions of use:

With an inlet pressure of: →	possible counter-pressure:
0.3 bar →	1.0 bar
0.4 bar →	1.1 bar
0.5 bar →	1.1 bar
0.6 bar →	1.2 bar
0.7 bar →	1.3 bar
0.8 bar →	1.3 bar
0.9 bar →	1.4 bar
1.0 bar →	1.4 bar
1.1 bar →	1.5 bar
1.2 bar →	1.5 bar

The respective pressure values are measured at the GRANUDOS, without the inserted hole washer.

In addition, pressure loss in the piping must be taken into account; therefore, pressure loss should be kept at a minimum.

The GRANUDOS's inlet and drain are equipped with hose connections where the pressure during operation can be measured by means of the included manometer. **If the counter-pressure exceeds 1.5 bar, a stronger pump can be used; please consult with WDT.**

4.4.1 Installation of the dissolving and measuring water supply

ATTENTION!

Before beginning any connection works, ensure that all of the ball valves on the measuring cell block are closed.

The dissolving and measuring water supply for the GRANUDOS should be separated from the swimming pool filter circuit so that the swimming pool circuit does not affect the uninterrupted supply with dissolving water

Flow through the pool

Only a proper pool flow can achieve a satisfactory control of the auxiliary hygiene parameters, i.e., free chlorine, pH value and redox potential. The dosed chemicals must reach all areas of the pool within a short time. Even under stress, the concentrations measured in different areas of the pool must be approximately the same.

Water removal point (dissolving water and measuring water)

Choosing the correct measuring water removal point is crucial for the effectiveness of the measuring and control technology (only CPR Touch XL). If possible, the measuring water should be identical to the pool water. Changes in the pool's water quality should be detected as quickly as possible using measuring technology. This is the only way to quickly correct the pool water quality by adding chemicals.

NOTICE!

No chemicals may be dosed upstream of the measuring water removal point. This would distort the measuring results!

If the pool water is conducted through an overflow gutter and a compensation pool (splash water container) that is also used for the fresh water feed-in, **only the removal of measuring water directly from the swimming pool will lead to satisfactory measuring and control results**.

In new systems, measuring water must be removed directly from the pool, in accordance with **DIN 19643**!

The pipes should be kept as short as possible. The piping of the supply line in PVC must be executed in the dimension d25-3/4". The nominal width must be increased for lines longer than 20 m or in case of poor pressure conditions.

Ensure that the connection sleeves for the water removal and the dosing point are completely open (metal sleeves may potentially be rusted shut).

Options for the water removal point

Option 1, Swimming pool water directly from the pool **(for Flex-CPR Touch XL)**

- Water removal about 200 mm below the upper edge of the water. The flow pressure at the GRANUDOS inlet of at least 0.2 bar, which is ensured by the height difference of at least 2 m, between the GRANUDOS foundation and the water surface. Install the GRANUDOS Flex-CPR a short distance below the removal point. Pay attention to an appropriate **size/pipe diameter of the removal** here to prevent hair or other impediments from being sucked in due to excessive flow velocities!
- Avoid a rising and falling of the inlet line in the piping to the GRANUDOS. This can lead to the formation of air cushions that may subsequently cause faults during operation.

Option 2, Swimming pool water downstream of the swimming pool filter **(for Flex-Touch + Flex-S5)**

- Water removal between swimming pool filter and heat exchanger, before chemical dosing with 3/4" sleeve. The flow pressure at the GRANUDOS inlet must be at least 0.2 bar.

Option 3, Swimming pool water upstream of the swimming pool filter **(for Flex-CPR Touch + Flex-Touch + Flex-S5)**

Only use this alternative in exceptional cases when Option 1 or 2 cannot be realised! (Not permissible in Germany and Austria)

- Water removal between circulation pump and swimming pool filter, before chemical dosing with 3/4" sleeve. No flocculant dosing must be installed. The flow pressure at the GRANUDOS inlet must be at least 0.2 bar. It may be necessary to add the measuring water separately if the distortion is too strong on the way through the splash water pool. Check the water quality!

Line connection design

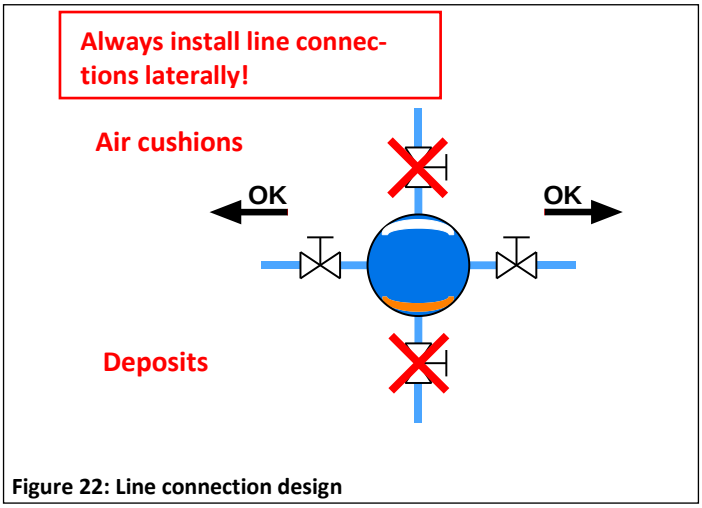

Figure 22: Line connection design

Description

Line connections should always be installed laterally. This prevents air cushions or deposits from impeding the flow in the branch.

Procedure

a) Install a line from the water removal point to the GRANUDOS inlet ball valve *(Pos 05, page 12)*. The separation of dissolving and measuring water **(only for Flex-CPR Touch XL)** occurs in the GRANUDOS.

NOTICE!

If the GRANUDOS must be installed above the pool level

- Install a free-flowing non-return valve in the supply line to the GRANUDOS.
- Install a spring-loaded non-return valve in the dosing line to the clean water piping to prevent the flushing tub from draining when the system is turned off. (see notice in the flow diagram, *Figure 20* – corresponding non-return valves are available)

If an overflow shall be excluded when the device is turned off or in the event of faults

- Install a 3/4” solenoid valve in the inlet and a d25 non-return valve in the drain. Check for minor pressure loss! Therefore, a supply pressure larger than 0.4 bar is required to open the non-return valves during commissioning!

Measuring water recirculation (only for Flex-CPR Touch XL)

The measuring water is automatically conducted into the GRANUDOS’s flushing unit and is thereby returned to the water circulation.

Optionally, the measuring water can also be directed into the drain.

ATTENTION!

For the measuring water recirculation, attention must be paid to the locally applicable provisions!

4.4.2 Installation of the dosing line for the chlorine solution

Procedure

a) Install the dosing line. From the outflow *(Pos 16)* of the GRANUDOS to the on-site dosing point (ball valve) downstream of the heat exchanger.

4.4.3 Buffer tank installation (option)

Procedure

a) Connect the buffer tank to the dosing line for the chlorine solution. See flow diagrams *Figure 19* and ***Figure 21***.

ATTENTION!

Due to the chlorine solution's corrosiveness, use only thick-walled pipes in PVC PN16 in the corresponding dimensions.

b) Install 2 pneumatic valves or 2 solenoid valves downstream of the chlorine dosing line's branch-off point, according to the flow diagram. The pneumatic valves are supplied with air via an additional solenoid valve and are thereby controlled.
c) Connect the pneumatic valves' control lines to the solenoid valve.
d) Connect the solenoid valve to the on-site air supply (min. 5 bar).

4.4.4 Installation of the overflow line for the flushing tub, collecting tub and dirt filter flushing function

Procedure

a) Screw the overflow nozzle into the flushing tub *(Pos 39)* and the collecting tub *(Pos 08)*.
b) Install lines from the overflow nozzles of the GRANUDOS's flushing tub and collecting tub to the drain.
c) Install a line from the flushing connection (option) on the dirt filter to the drain.

4.4.5 Flocculant dosing **(only CPR Touch XL)**

The GRANUDOS Flex-CPR Touch XL is equipped with a flocculant pump.

Install the dosing point as far upstream of the swimming pool filter as possible and as close as possible to the circulation pump. Measuring water must never be removed downstream of the dosing point!

Procedure

a) Select a suitable dosing point and install the connection for the dosing valve
b) Screw the dosing valve into the dosing point and install the dosing line from the dosing pump to the dosing point.

Dosing valve for flocculant



Figure 23, Dosing valve

The dosing line/dosing hose in PE-blue 4x1 mm is included in the scope of delivery.

4.5 Electrical installation

WARNING!

Risk of death due to high voltage. All electrical work on the device must only be carried out by trained electricians in accordance with the applicable safety regulations!

Before any electrical work is carried out, the power supply must be switched off and secured against being reactivated!

During all installation work, the valves must be closed and the lines depressurised to prevent injury and damage.

ESD SENSITIVE!

The electronic components in the devices are sensitive to electrostatic discharges. The generally accepted safety precautions for electronic components must be observed when handling the devices.

The following applies, in particular:

- Do not pull or plug in socket connections under voltage.
- As the person handling the device, please discharge yourself electrostatically for at least 5 seconds prior to directly touching the electronic components, e.g., by touching a grounded part of the system or by wearing an ESD antistatic wrist strap connected to ground.

4.5.1 Opening and closing the housing, control unit **CPR Touch XL and Touch**

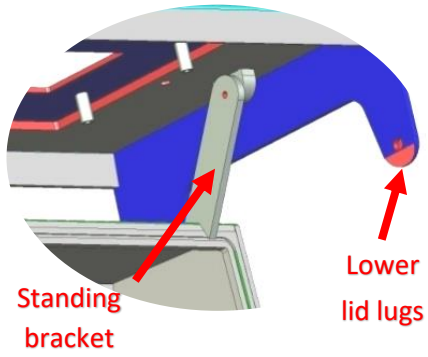

Figure 24, Control housing

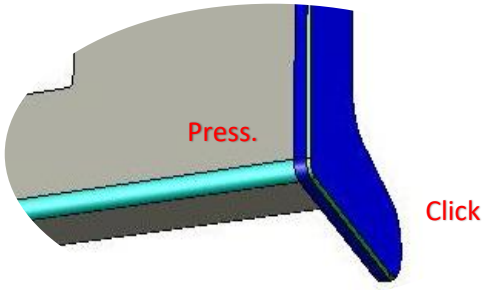

Figure 25, Control housing

Procedure

a) The housing is equipped with an “easy lock-in closure”.
b) In order to open the display lid or the small connection space cover, the two lower lid lugs must be gently lifted outwards from the main housing, and the display lid must be pulled forwards. The upper lid lugs run in guide grooves up to the front lock-in position.
c) Afterwards, the display lid is folded upwards. The display lid is supported and locked in on the main housing by means of the standing bracket.
d) In order to close the housing, the standing bracket is unlocked with a backward motion and the lid is closed by folding it downwards. The upper lid lugs must now be unlocked, and the lid can be pushed backwards onto the main housing. In order to tightly reseal the housing, press gently on the housing’s four corners.
e) The housing lid will close with a soft, audible click. Always ensure that all lid lugs are firmly clipped in place.

4.5.2 Opening and closing the housing, control unit **S5**

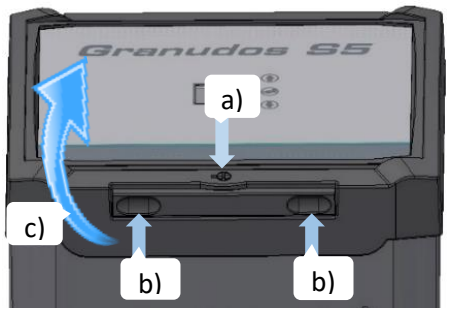

Figure 26, Control housing

Procedure

a) Unlock the screw cap
b) Press down on both recessed grips until the housing snaps open.
c) Fold the lid upwards
d) Close the housing in reverse sequence.
The housing lid will close with a soft, audible click.
e) Ensure that the housing lid is securely locked.

4.5.3 Electrical connection

The device must be supplied with continuous voltage, i.e., the voltage supply must not be locked with the swimming pool filter system. A digital input is available for interlocking the dosing with the swimming pool filter system.

For electrical installation, see also the wiring diagrams in the control unit's control housing, or in *Chapter 9.2.*

SIGNALS TO AND FROM OUTSIDE, SEE WIRING DIAGRAMS

ATTENTION!

External control of the inputs must be carried out in isolation.

Pay attention to the maximum contact current capacity of the relay contacts.

The two external screw connections with M25 are intended for interface cables with RJ45 plug.

ATTENTION!

Please pay attention to the spatial separation between energy and signal lines when inserting additional cables. The crossing of energy and signal lines must be avoided!

Inserting cables

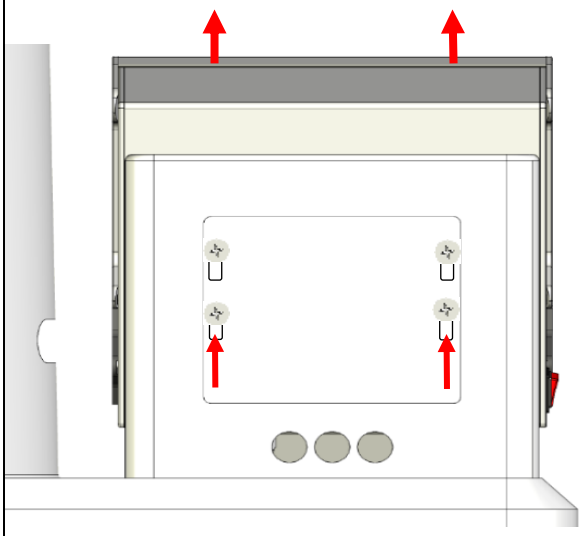

Figure 27, Control housing back

Description

The control housing can be moved upwards via four slotted holes so that the screwed cable glands are accessible.

Procedure

a) Loosen the 4 screws on the back of the control housing.
b) Push the control housing upwards.

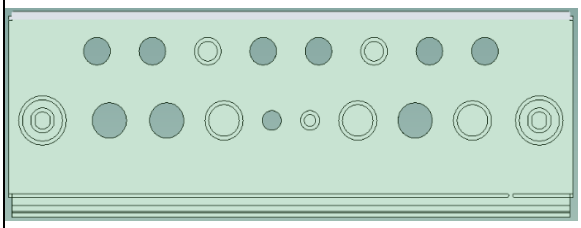

Figure 28, Control housing underside

Description

The underside of the control housing comes with several factory-made free screw connections. Several push-outs for metric screwed cable glands are available for additional insertions.

The two external screw connections with M25 are intended for the insertion of a preassembled interface cable with RJ45 plug.

Upon completion of the work, the control housing must be properly closed again!

Temperature control (only for CPR Touch XL and Touch)

The device is equipped with a temperature control. This temperature control can be used to regulate the pool water temperature. If the pool is heated by means of a flow-through heat exchanger, it must be ensured that the associated heating circuit pump can only be activated when the swimming pool filter system is in operation!

Please remember that the regulation of the pool temperature can only be guaranteed if the filter operation times are set to an appropriate duration.

In order to achieve a precise measuring result, the sensor must be installed by means of an immersion sleeve in the swimming pool's piping, upstream of the swimming pool filter and as close as possible to the pool.

ATTENTION!

Immersion sleeves that come into contact with the swimming pool water must be corrosion-resistant.

Electrical connection / external connection to the Central Control System (CCS)

To ensure that the GRANUDOS does not dose when the pump of the swimming pool filter is switched off or when the water supply is not guaranteed, the GRANUDOS must be interlocked with the swimming pool filter system by the CCS (Central Control System).

5 Commissioning/ recommissioning

5.1 Safety notices



ATTENTION!

Also pay attention to this chapter for each recommissioning following an operating pause. Do not switch on the GRANUDOS FLEX until the flushing tub has been filled.

The work described here may only be carried out by trained specialist personnel from a specialist company who have read and understood the entire Operating Instructions. Prior to commissioning, the installed systems must be checked for proper installation and leaks.

Please use the *commissioning protocol from Chapter 9.3* for commissioning. The device is delivered with defined factory settings. You can find the setting values in the *Operation* data sheet in *Chapter 9.4.*



ATTENTION!

During the installation of the piping and the electrical system, foreign objects may have fallen into the flushing unit, which could lead to faults in the floating valve or the suction pipe of the flow switch. Remove foreign objects!

5.2 Commissioning

Before starting the commissioning, ensure that the ball valves at the measuring cell block *(03)* (only Flex-CPR Touch XL) are closed.

5.2.1 Inserting/replacing the peristaltic pump's roller carriers

The acid pump and flocculation pump (option) are mounted on the front of the GRANUDOS housing. The roller carriers have been removed from the peristaltic pumps to prevent any deformation of the hose. The procedure applies to both peristaltic pumps.



CAUTION!

Ensure that the device is switched off to avoid crushing by the peristaltic pump.

Insert/replace roller carrier	
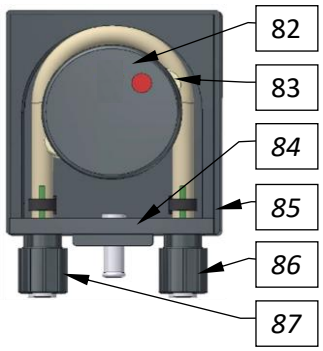 **Figure 29, Peristaltic pump**	**Key** 81. Transparent protective cover (not shown) 82. Safety disc 83. Roller carrier (covered) 84. Hose bracket kit (hose bracket with dosing hose) 85. Pump casing 86. Pressure connection 87. Suction connection **Procedure** a) Remove the clipped-on, transparent pump cover (not shown). b) Remove the safety disc. c) Pull the hose bracket forwards out of the guide in the housing.
 **Figure 30, Insert roller carrier**	d) Push the enclosed roller carrier onto the axle.
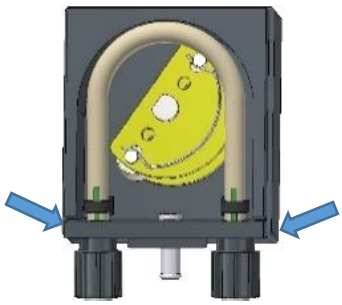 **Figure 31, Push on hose bracket**	e) Insert the hose bracket kit into the housing's guide until the hose bracket is flush with the front.
 **Figure 32, Turn roller carrier**	f) Turn the roller carrier. In the process, carefully press the hose into the housing over the flat area in the roller carrier until the hose is located completely inside the housing. Turn several times more. g) Now replace the safety disc and the transparent pump cover. h) The roller carrier installation is completed.

For dismantling the roller carrier and the hose bracket, proceed in the reverse sequence.

5.2.2 Preparing acid dosing for operation



DANGER DUE TO CORROSIVE SUBSTANCES!

Toxic fumes may occur when handling acids. Do not inhale any fumes.



Personal safety equipment must be put on before starting work with chemicals: Protective gloves, apron, face protection, foot protection.

Pay attention to the specifications for each chemical listed in the safety data sheets, e.g., protective clothing.



TIP!

As a rule, sulphuric acid is used to regulate the pH Value. However, in special cases, e.g., if the water is very hard and/or has a high pH value and/or a high dosing performance is required, it is recommended to use hydrochloric acid instead of sulphuric acid. This prevents the potential formation of gypsum residue due to high sulphate concentrations in particular when using the buffer tank option.

With a hydrochloric acid concentration of more than 10%, a Viton hose must be used in the peristaltic pump! This is resistant to a maximum concentration of 33% and must be replaced every 6 months!

Connect/change acid canister

a) Do not bring the acid into contact with other chemicals!
b) Unscrew the **red screw cap** with the suction lance from the empty acid canister, place the suction lance in the collecting tub, and immediately close the empty canister with the original screw cap.
c) Lift the empty canister out of the collecting tub.
d) Place the full acid canister into the collecting tub.
e) Unscrew the screw cap from the full acid canister, immediately insert the suction lance into the canister and close it securely with the red screw cap.
f) Store the acid canister's original screw cap until the next time the canister is changed.

5.2.3 Preparing flocculant dosing for operation **(only CPR Touch XL)**



Personal safety equipment must be put on before starting work with chemicals: Protective gloves, apron, face protection, foot protection.

Please pay attention to the chemicals manufacturers' safety data sheets!

Connect/change flocculant canister

Do not bring the flocculant into contact with other chemicals!

Procedure

a) Unscrew the **blue screw cap** with the suction lance from the empty flocculant canister, place the suction lance in the collecting tub, and immediately close the empty canister with the original screw cap.
b) Lift the empty canister out of the collecting tub.
c) Place the full flocculant canister into the collecting tub
d) Unscrew the screw cap from the full flocculant canister, immediately insert the suction lance into the canister and close it securely with the blue screw cap.
e) Store the flocculant canister's original screw cap until the next time the canister is changed.

5.2.4 Filling the dosing hopper with chlorine granulate



WARNING!

The chlorine granulate and acid must not be mixed with each other or with other chemicals or substances! These substances can have a strong reaction when combined with each other and release toxic chlorine gas outside of water.

Remove potential encrustations from the dosing hopper to prevent faults during the chlorine dosing.



Personal safety equipment must be put on before starting work with chemicals: Protective gloves, apron, face protection, foot protection.

Pay attention to the safety data sheets for each chemical.

5.2.4.1 Filling without filling appliance

Procedure

a) Remove the cover. Using a cup, carefully empty the chlorine granulate into the dosing hopper along the wall so that no chlorine dust is produced (do not dump it in!).
b) Then close the cover

Only fill in the amount needed for about 1-2 weeks so that the chlorine granulate does not bond with the humidity in the air, clump together and trickle down less easily.

5.2.4.2 Filling with filling appliance

Replace the granulate bucket	
01. 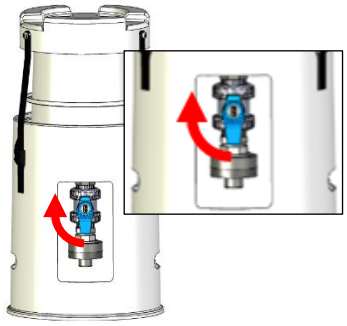	01. Close the filling ball valve
02. 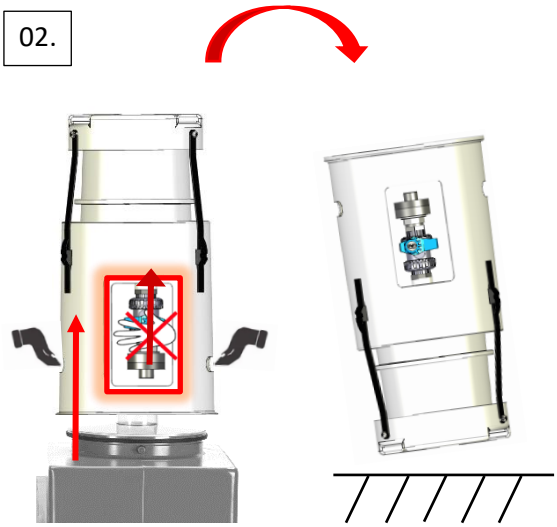	02. Remove the entire filling appliance, turn it 180° and place it on the floor 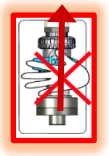 **Caution: Risk of breakage!** **Do not lift by the ball valve!** 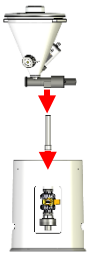 **Info:** **The filling appliance can also be used as a shelf for the dosing hopper.**
03. 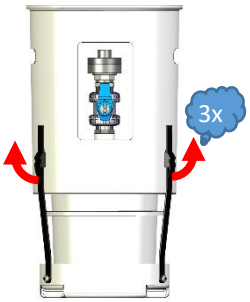	03. Open the 3 clamping levers and pull out the lugs
04. 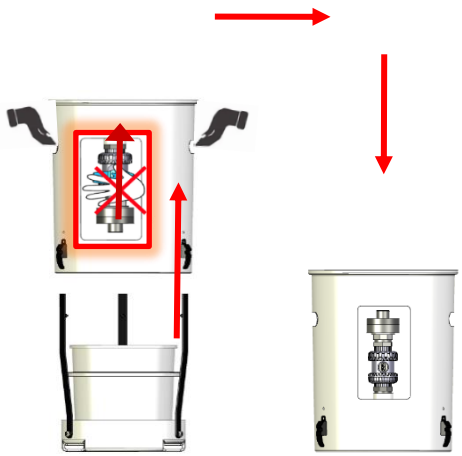	04. Remove the attachment from the filling appliance and place it on the floor **Caution: Risk of breakage!** **Do not lift by the ball valve!**

05. 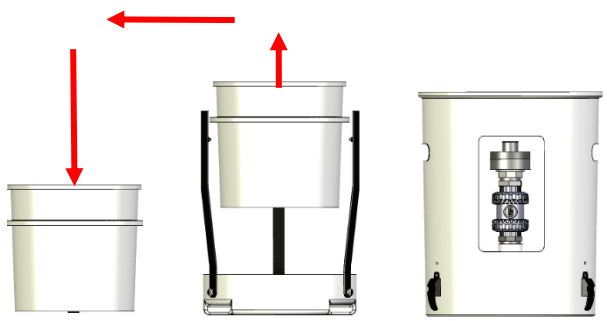	05. Remove the empty granulate bucket from the cover with the tension bands and place it on the floor
06. 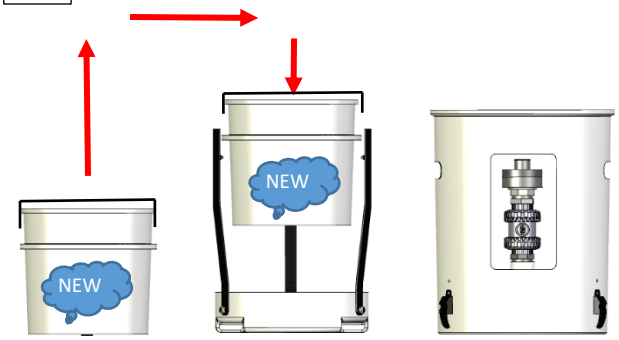	06. Place the new granulate bucket in the cover with the tension bands
07. 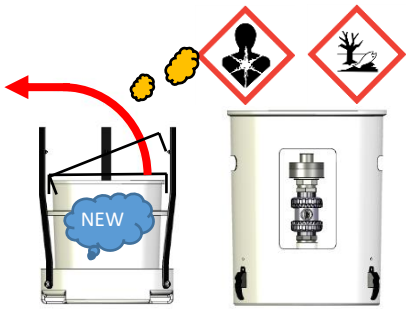	07. Remove the granulate bucket's cover; **!!! Warning chlorine dust, corrosive !!!** 
08. 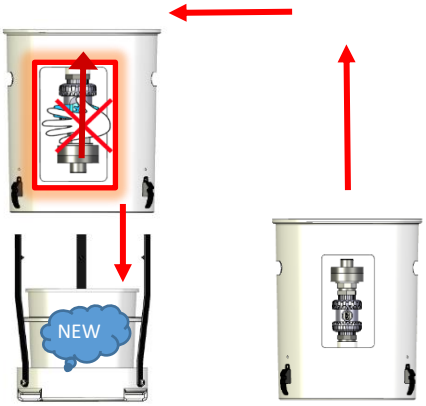	08. Place the attachment on the new granulate bucket 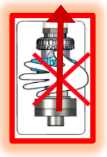 **Caution: Risk of breakage!** **Do not lift by the ball valve!**

09. 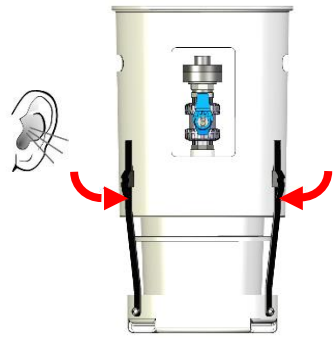	09. Thread the tension bands into the clamping levers and close them securely. Clicking sound!
10. 	10. Shake the attachment to ensure that it sits firmly on the granulate bucket! Ensure that the **filling ball valve is closed**!
11. 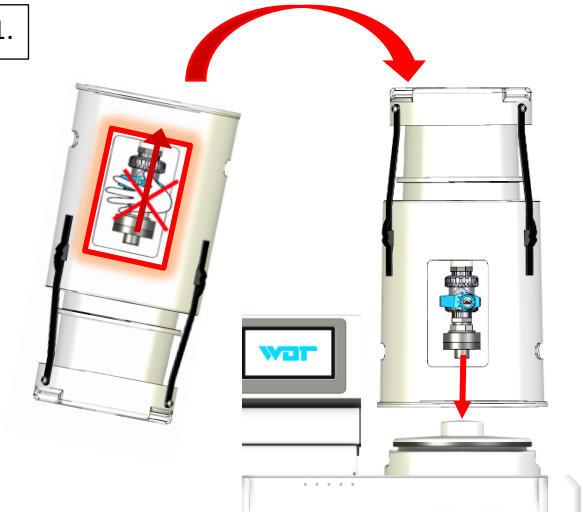	11. Turn the entire filling appliance 180° and place it on the GRANUDOS's cover The nozzle extends into the orifice of the dosing hopper's cover  **Caution: Risk of breakage!** **Do not lift by the ball valve!**
12. 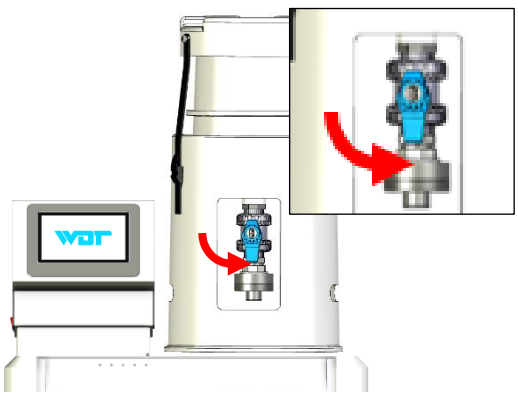	12. Open the filling ball valve Ensure that granulate trickles into the hopper Finished!

5.2.5 Venting of the booster pump and the piping to the GRANUDOS

Overview dust protection housing of the booster pump

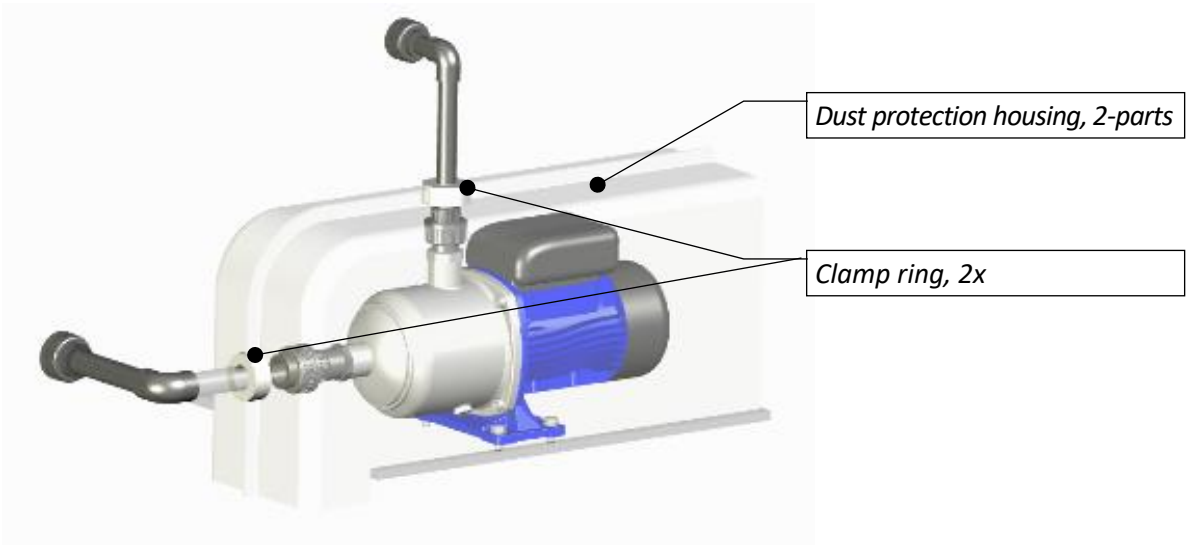

Figure 33: Dust protection housing

Description

The booster pump and the piping must be carefully vented prior to each commissioning of the GRANUDOS Flex. To prevent the booster pump from running dry, pay attention to the following during installation and commissioning:

Procedure

a) Push the two clamp rings to the side and remove both parts of the housing.
b) Manually check if the booster pump can be turned with ease. To do so, you can check the smooth running of the shaft at the fan propeller in the back, using a screwdriver. If the shaft does not turn smoothly, the mechanical seal is clotted. Try to loosen it by abruptly turning it back and forth. If this is not possible, the booster pump must be deinstalled and disassembled to loosen the mechanical seal.

ATTENTION!

If the pump is switched on with a blocked mechanical seal, the booster pump's failure is inevitable.

c) During commissioning, open the ball valves at the water removal point and the dosing point as well as the ball valve inlet *(05)* at the dirt filter and wait until the flushing tub is half full. This ensures that water has flowed through the pump and the pump has been vented. Now open the shut-off valve *(16)* downstream of the cyclone. Plug the safety plug in a corresponding power socket and **turn on** the **device at the main switch** *(02)*.
d) The piping to the GRANUDOS must be carefully vented. Observe the dirt filter for this purpose. If the dirt filter's water level shows a significant drop when the pump is switched on, turn off the GRANUDOS, open the venting screw on top of the dirt filter and allow water to flow back into the dirt filter before switching the device on again.
If necessary, repeat the process several times until the dirt filter remains full; a few air bubbles in the upper dirt filter area are inconsequential.

ATTENTION!

If the pump draws air while in operation or during unmonitored activation, the pump's mechanical seal will run dry, overheat and start to leak. This can be the case with an installation

above the swimming pool level, when draining the supply line or when turning off the swimming pool filter system.

In this installation scenario, pay attention to the following installation information.

a) Install a free-flowing non-return valve in the supply line to the GRANUDOS.
b) Install a spring-loaded non-return valve in the dosing line to the clean water piping to avoid the flushing tub from draining when the system is turned off. Corresponding non-return valves are optionally available.
If it is intended or necessary to prevent an overflow when the device is turned off or in case of a fault, install a solenoid valve 3/4" in the inlet and a non-return valve d25 or d32 in the drain. Check for minor pressure loss! For safe operation, a supply pressure of more than 0.4 bar is therefore required!

5.2.6 Venting the dust extraction pump (option)



CAUTION!

Water may splash out when venting the pump!



Personal safety equipment must be put on before starting work with chemicals: Protective gloves, apron, face protection, foot protection.

Description

In order for the dust extraction to function properly, the dust extraction's circulation pump must be vented.

Procedure

a) **Switch off** the device at the **main switch**.
b) Fill the flushing tub with water up to the mid-filling level (if this has not been done yet). This fills the dust extraction pump with water, preventing a dry run!
c) Prepare the dust extraction pump (*51*) for venting; to do so, slightly loosen a screw connection on the pressure side
d) **Switch on** the device at the **main switch**
INFO! Immediately after switching on, the flushing system initiates the flushing programme (dust extraction pump runs, solenoid valve opens)
e) Vent the dust extraction pump and retighten the hose connection

Overview dust extraction

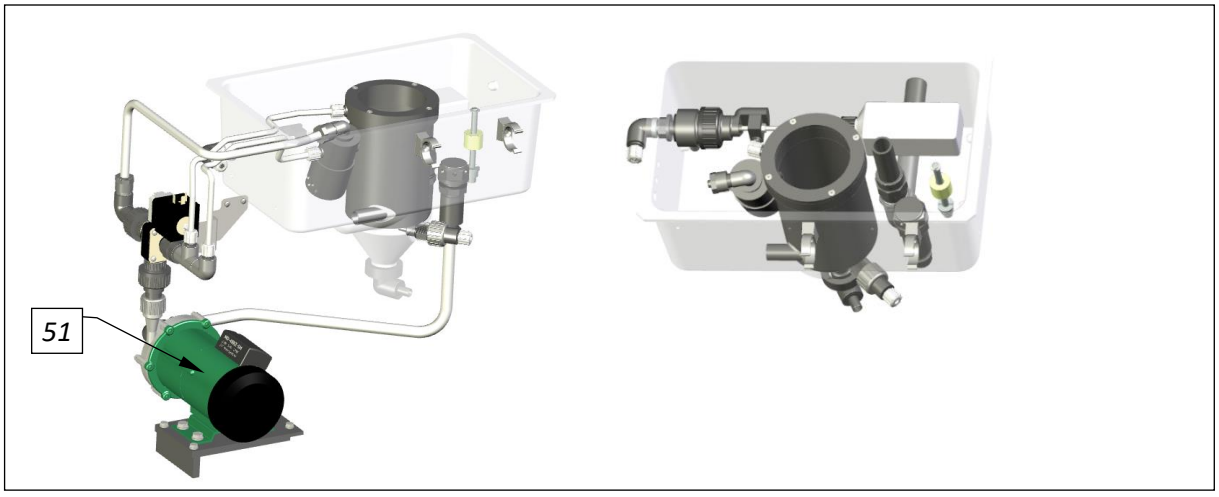

Figure 34: Dust extraction

5.2.7 Setting the water flow in the dissolving unit and the pressure switch

Overview Type Flex-CPR Touch XL dissolving unit

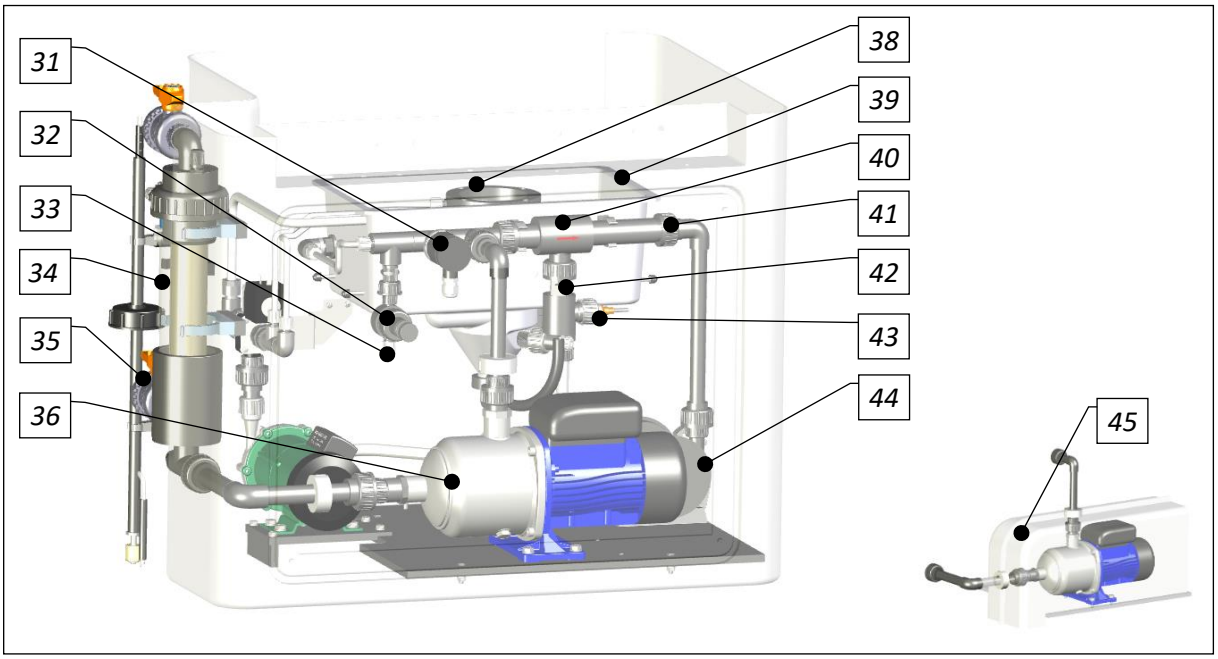

Figure 35, GRANUDOS Flex dissolving unit

Overview GRANUDOS Type Flex-Touch and Type Flex-S5 dissolving units

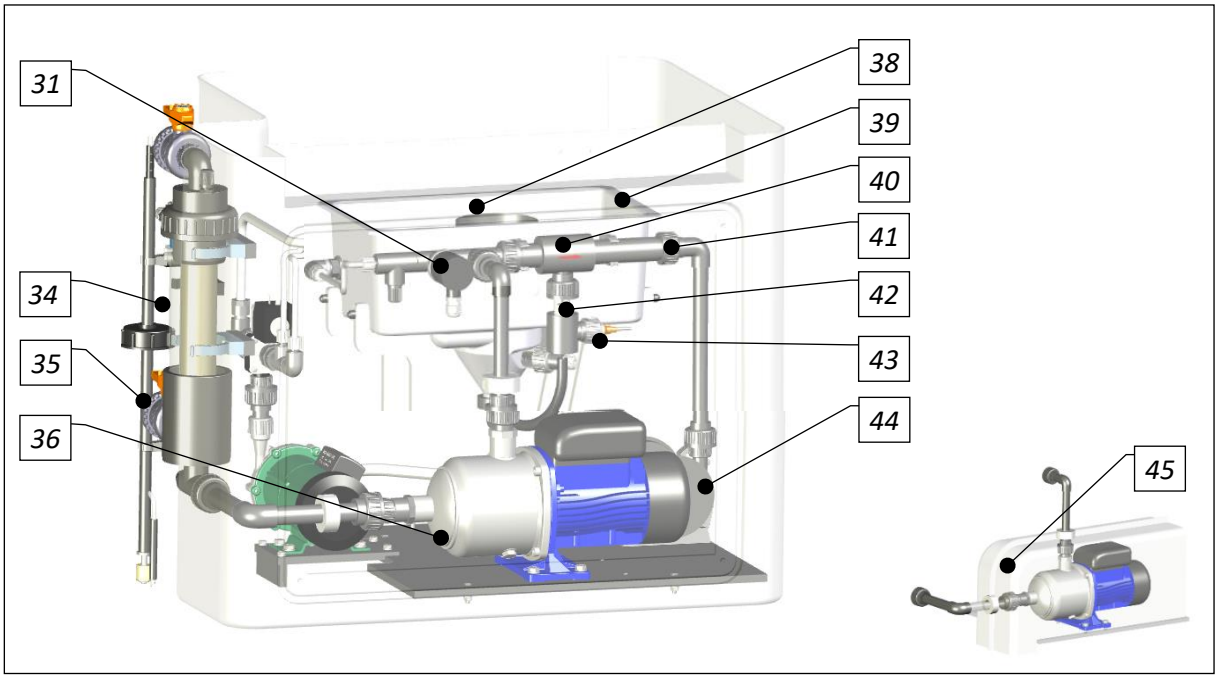

Figure 36, GRANUDOS dissolving unit

Overview flushing tub

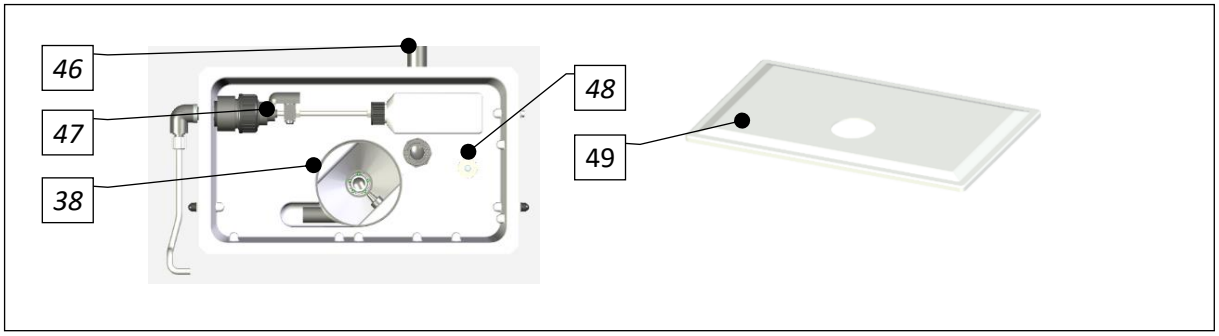

Figure 37, GRANUDOS Flex dissolving unit

Key dissolving unit

31. Pressure switch	32. Pressure retention valve for supplying measuring cell block (only CPR Touch XL)
33. Outflow for supplying the measuring cell block (only CPR Touch XL)	34. Dirt filter d75 mm
35. Flushing connection for dirt filter (option)	36. Booster pump (different designs)
37. ---	38. Flushing pipe
39. Flushing tub	40. Injector
41. Pipe union with hole washer	42. Flow switch for suction pipe
43. Dosing valve for pH-reducer	44. Dissolving and mixing cyclone
45. Dust cover for booster pump	46. Flushing tub overflow
47. Floating valve inlet for flushing tub	48. Level switch min/max for flushing tub
49. Lid for flushing tub	50. ---

Adjustment of suction capacity

The **further procedure** is only possible when the device is turned on.

a) **Switch on** the device at the **main switch**.
The booster pump starts, unless the pressure switch (*31*) or the level switch min *(48)* respond.

b) The hole washer in the pipe union (*41*) behind the injector (*40*) adjusts the injector's suction performance to the pressure conditions. If the water level in the flushing tub (*39*) drops during commissioning, a hole washer with a smaller drill hole must be inserted in the pipe union.

c) If the water level rises, or if the flow switch's (*42*) switch body is not clearly pushed upwards, a hole washer with a larger drill hole is required, or the hole washer must be removed entirely.

A hole washer with 6 mm is installed ex works; hole washers with 5.5 mm and 7 mm are available in the enclosed spare parts bag.

Setting the pressure switch

The installed pressure switch (*31*) records the booster pump's (*36*) effective pressure. In the event of air intake or a pressure drop in the water supply, the device switches off when the value falls below the switching pressure. In addition to the electric locking, this ensures that:

- The dosing is turned off if the booster pump does not transport enough water.
- The booster pump does not run dry.

To set the switching point, set to automatic operation mode.

Remove the cover from the pressure switch, turn the adjustment knob clockwise by 0.25 bar and wait for 6 seconds.

If the GRANUDOS continues to run, repeat the process until the GRANUDOS stops and the "Pressure too low" fault indication is displayed. The GRANUDOS stops. Now turn the adjustment knob 0.25 bar counter-clockwise and acknowledge the alarm message. The GRANUDOS starts up again. The GRANUDOS will now throw a fault at a pressure drop of 0.25 bar.

A switching point of 1.5 bar is preset ex works.

5.2.8 Setting the water level in the flushing tub

The water level in the flushing tub can be changed by screwing the float at the floating valve (*47*) in or out. A higher level is achieved by unscrewing the float, a lower level by screwing the float in. One revolution corresponds to approx. 1cm water height. Adjust the float in the flushing tub so that the water level corresponds approximately with the centre of the flushing tub.

TIP!

This concludes the commissioning of the dosing unit.

6 Operation / Use

The locally applicable accident prevention regulations must be complied with. For example, DGUV 107-001 Operation of swimming pools in Germany.

6.1 Replenish consumables





CAUTION!

Personal safety equipment must be put on when handling chemicals: Protective gloves, apron, face protection, foot protection.

Pay attention to the safety data sheets for each chemical.

- Refill acid
  See *Chapter 5.2.2,* Connecting the acid canister.
  Pay attention to the specifications for each chemical listed in the safety data sheets!

- Refill flocculant **(only CPR Touch XL)**
  See *Chapter 5.2.3,* Connecting the flocculant canister.
  Pay attention to the specifications for each chemical listed in the safety data sheets!

- Refill chlorine granulate
  Changing the chlorine granulate, see *Chapter 5.2.4,* Filling the dosing hopper

6.2 Operation of the control unit

For operating and setting the GRANUDOS, continue reading the Operating Instructions for the control unit:

- For GRANUDOS **CPR Touch XL**, Operating Instructions **"CPR-Touch XL Measuring and Control Unit"** No. **BA MR 001**, Chapter 6
- For GRANUDOS **Touch**, Operating Instructions **"GRANUDOS Touch Control Unit"** No. **BA SW 010**, Chapter 6.
- For GRANUDOS **S5**, Operating Instructions **"GRANUDOS S5 Control Unit"** No. **BA SW 014**, Chapter 6.

7 Maintenance / Care / Fault removal

For all activities not described here, consult your specialist dealer!
Recommendation: Device maintenance once a year by a specialist dealer / instructed persons!

7.1 Device maintenance



WARNING!



Danger due to electrical voltage! Before any electrical work is carried out, the device must be disconnected from the power supply and secured against being reactivated!

All electrical work on the device must only be carried out by trained specialists in accordance with the applicable safety regulations!

During all repair and maintenance work, the valves must be closed and the lines depressurised to prevent injury.

We recommend that you assign a specialist firm to carry out regular maintenance.



TIP!

The maintenance tasks required for trouble-free operation are listed in the maintenance protocol in *Chapter 9.5*. These tasks should be documented in the maintenance protocol as proof of work.

7.1.1 Cleaning the dirt filter



ATTENTION!

A clean dirt filter (*34*) is important for proper functioning. A contaminated dirt filter can lead to cavitation in the booster pump, causing a reduced performance and damage to the bearings. It is essential that you clean the dirt filter outside of the GRANUDOS.

When working on lines that carry water, always close the inlet and the outflow ball valves!

Procedure without flushing function

a) Slowly close the inlet ball valve (Pos. *05, page 12*05*)* and the outflow ball valve *(Pos. 16)*.
b) Loosen the upper pipe union d75 and the lower pipe union d25 at the dirt filter *(Pos. 34, page 48)* and completely remove the dirt filter from the bracket.
c) Pull out the filter insert.
d) Clean the filter insert and the filter hood under running water.
e) Reinstall the dirt filter in the reverse sequence.
f) Slowly open the inlet ball valve and the outflow ball valve.

Procedure with flushing function (option)

a) Slowly close the outflow ball valve *(*16*)*.
b) Slowly open the flushing water ball valve (*19*) on the dirt filter and flush the dirt from the dirt filter for approx. 30 seconds. Proceed until the dirt filter is clean. Please ensure that the water can drain fast enough.
c) Slowly close the flushing water ball valve on the dirt filter to avoid pressure surges.
d) Slowly open the outflow ball valve (Pos. *16*).

7.1.2 Replacing the dosing screw and the dust gasket

CAUTION!

Due to the excessive chlorine dust, personal safety equipment must be put on prior to starting the work: Protective gloves, apron, face protection.

Overview dosing motor with dosing screw

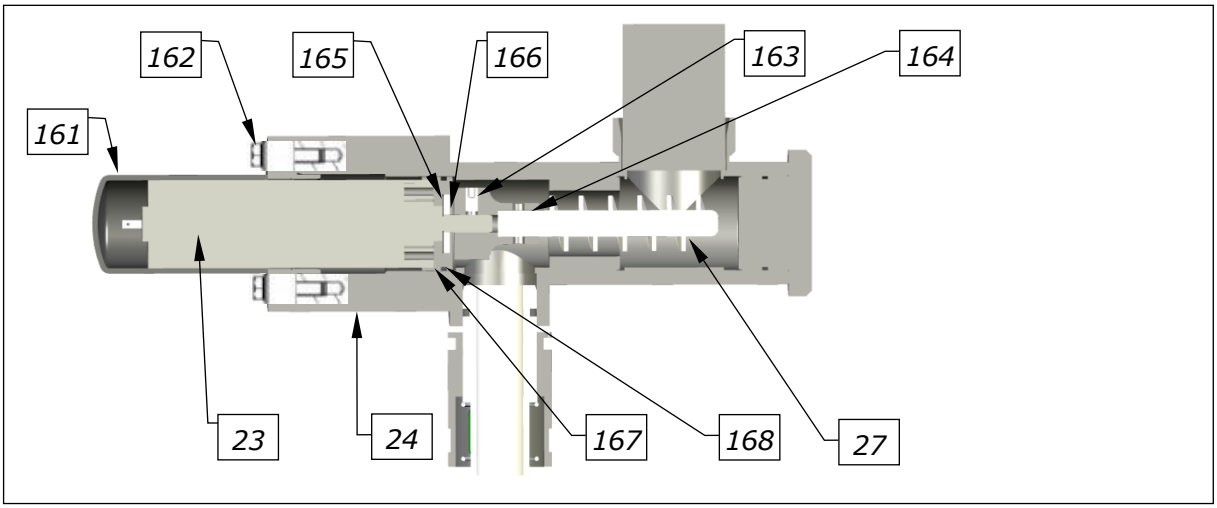

Figure 38: Dosing motor with dosing screw

Key

23. Dosing motor	*24.* Motor bracket
27. Dosing screw	---
161. Protective cover for motor	162. Screw M5x20 with protective cap
163. Threaded pin	164. PVC adapter for dosing screw
165. Sealing washer EPDM	166. Felt washer
167. Dust cover	168. O-ring

Description

When only replacing the dosing screw, the seal in the dust protection cover should also be renewed. The sealing washers made of EPDM and felt are included in the maintenance kit's scope of delivery.

Required tools for replacing the dosing screw or the dosing motor

- Wrench 8 mm to loosen the dosing motor
- Small knife or screwdriver to clean the threaded pin
- Allen wrench 2.5 mm for the threaded pin in the dosing screw

7.1.2.1 Removal of the dosing motor and the dosing screw

CAUTION!

Due to the excessive chlorine dust, personal safety equipment must be put on prior to starting the work: Protective gloves, apron, face protection, foot protection.

Overview dosing hopper

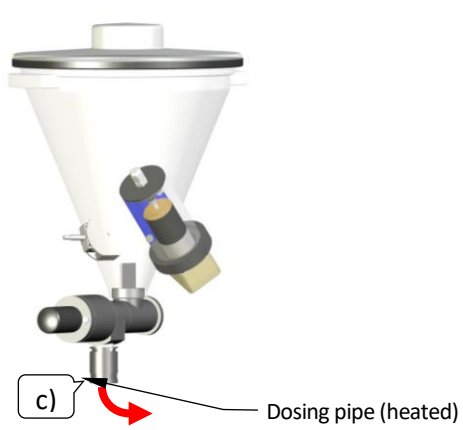

Figure 39: Dosing hopper

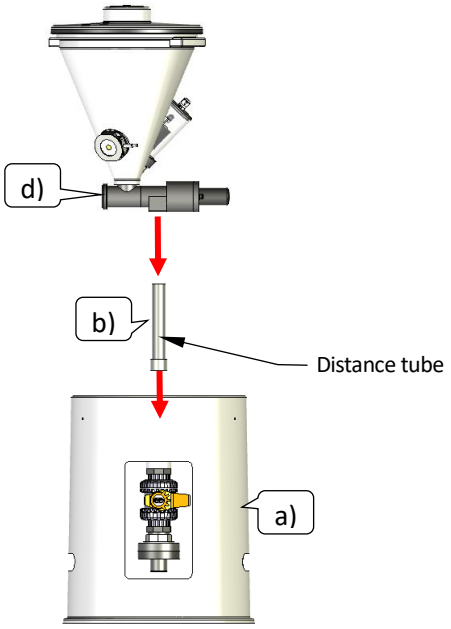

Dosing hopper and filling appliance (option)

Procedure

a) Place the filling device (option) on the floor next to the appliance.
b) Insert the distance tube (item no. 30732 in the accessory bag) with the doubled-up side into the hopper of the filling device.
c) Lift out the dosing hopper with dosing motor and dosing screw upwards, pull off the heated dosing tube and remove it.
d) Place the dosing hopper in the filling device/distance tube (optional) or a bucket.
e) Remove the lid from the dosing hopper.
f) Fill the chlorine granulate from the dosing hopper completely into the filling device (Option) or into a bucket and close it (chlorine odor).
g) Open the terminal box on the dosing hopper and disconnect the motor cable (only necessary when changing the motor).
h) Remove the protective caps from the M5x20 fastening screws *(Pos 162)* and unscrew the screws with a wrench SW 8.
i) Pull the motor with the dosing screw out of the motor holder (24) - hold a flat collecting tray under the motor holder so that no chlorine granulate is scattered. Clean the inside of the motor holder and remove any scattered chlorine granules.
j) Clean the dosing screw – check whether the chlorine granulate inside the screw is heavily solidified or easily scatters from the screw when the screw is pulled out.
If the granulate is solidified, it may be too moist or have an excessive dust content. It is also possible that the screw is too worn and the granulate is no longer properly transported.

7.1.2.2 Maintenance of the dosing motor

Overview dosing motor

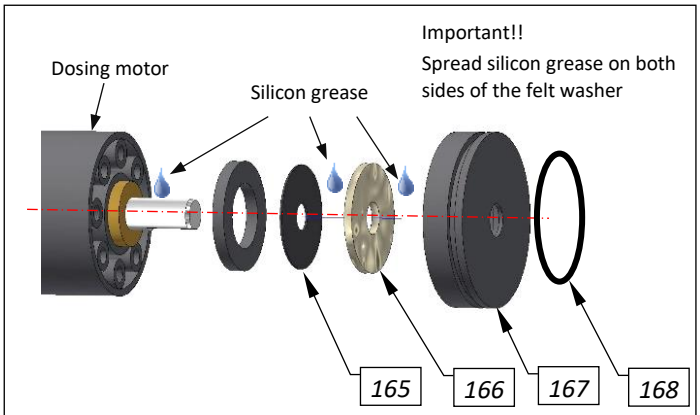

Figure 40: Dosing motor

Key:

165.	*Sealing washer* EPDM
166.	*Felt* washer
167.	*Dust* cover
168.	*O-ring*

Procedure

a) Use a small screwdriver, knife or a similar tool to scrape the putty from the thread hole of the *Threaded* pin *(163, page 52)* on the dosing screw's PVC adapter.
b) Loosen the threaded pin with an Allen wrench SW 2.5 and pull the dosing screw from the shaft.
c) Pull the dust cover *(167)* from the dosing motor, remove the old sealing washer EPDM *(165)* and the old felt washer *(166)* and clean the shaft.
d) Spread silicon grease on both sides of the new felt washer.
e) Fill the bearing indentations at the dosing motor with silicon grease.
f) First push the sealing washer EPDM on the shaft, followed by the greased felt washer, then firmly reattach the dust cover.
g) Remove the old O-ring *(168)* from the dust cover's groove, insert a new O-ring, and apply approx. 3 layers of Teflon tape.
h) Spread silicon grease on the front surfaces of the dosing motor/dust cover and the dosing screw.
i) Push the dosing screw on the shaft so that the threaded pin is located on the flat part of the motor shaft.
j) Press the dosing screw against the motor and fasten the threaded pin.

ATTENTION!

Do not fasten the threaded pin too tightly, as this may strip the PVC thread. A maximum of ¼ turn.

k) Thoroughly close the thread bore with putty.

ATTENTION!

Without putty, the screw will heavily corrode within a short time and can no longer be loosened. If the dosing screw or the motor must be replaced again at a later time, both parts would have to be replaced together!

l) Push the dosing motor into the cleaned motor bracket *(24)* and evenly screw tight with the new screws M5x20; push on the protective caps.

7.1.2.3 Replacing the dosing motor (without dosing screw)

Procedure

a) Loosen the threaded pin of the old dosing screw.
b) Clean the front surface of the old dosing screw's PVC adapter and cover it with silicon grease.
c) Open the connection socket at the dosing hopper, loosen the terminals of the dosing motor cable (brown - white), pull in a new motor cable and clamp tight: brown on brown, white on white.
d) Push the dosing screw on the shaft so that the threaded pin is located on the flat part of the motor shaft.
e) Press the dosing screw against the motor and fasten the threaded pin.

ATTENTION!

Do not fasten the threaded pin too tightly, as this may strip the PVC thread. A maximum of ¼ turn.

f) Push the motor with the dosing screw back into the cleaned bracket, tighten the flange – not too tight – and push the protective caps on the screw heads.
g) Place a new O-ring on the dosing screw's guide pipe, wrap with Teflon tape (approx. 3 layers), grease and push the finished dosing motor unit into the bracket.

7.1.2.4 Replacing the dosing screw (without dosing motor)

Description

When replacing the dosing screw (without dosing motor), the seal in the dust protection cover should also be renewed. The sealing washers made of EPDM and felt are included in the maintenance kit's scope of delivery.

Procedure

a) Pull the dust cover *(167)* from the dosing motor, remove the old sealing washer EPDM *(165)* and the old felt washer *(166)* and clean the shaft.
b) Spread silicon grease on both sides of the new felt washer.
c) Fill the bearing indentations at the dosing motor with silicon grease.
d) First push the sealing washer EPDM on the shaft, followed by the greased felt washer, then firmly reattach the dust cover.
e) Remove the old O-ring *(168)* from the dust cover's groove, insert a new O-ring, and apply approx. 3 layers of Teflon tape.
f) Spread silicon grease on the front surfaces of the dosing motor/dust cover and the dosing screw.
g) Push the dosing screw on the shaft so that the threaded pin is located on the flat part of the motor shaft.
h) Press the dosing screw against the motor and fasten the threaded pin.

ATTENTION!

Do not fasten the threaded pin too tightly, as this may strip the PVC thread. A maximum of ¼ turn.

i) Thoroughly close the thread bore with putty.

ATTENTION!

Without putty, the screw will heavily corrode within a short time and can no longer be loosened. If the dosing screw or the motor must be replaced again at a later time, both parts would have to be replaced together!

j) Test the dosing motor's function
k) Push the dosing motor into the cleaned motor bracket *(24)* and evenly screw tight with the new screws M5x20; push on the protective caps.

7.1.3 Injector with flow switch, replacing the hole washer

Overview

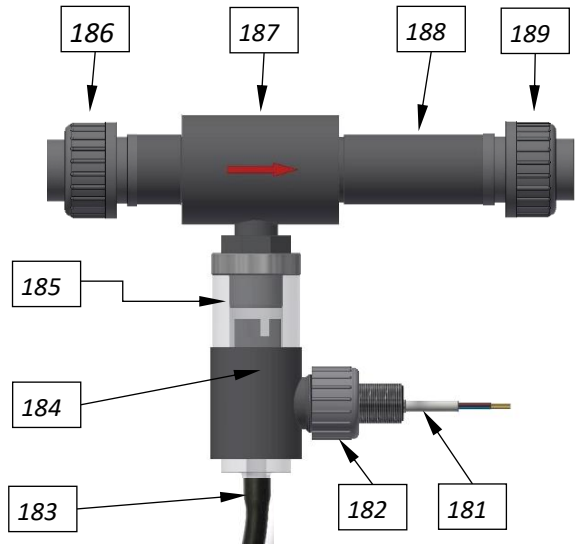

Figure 41: Flow switch d 40

Key

181.	Flow switch with LED
182.	Union nut for flow switch
183.	Viton hose to the flushing tub
184.	Switch body (in the suction pipe)
185.	Suction pipe
186.	Union nut and injector inlet
187.	Injector
188.	Injector nozzle with installed hole washer
189.	Union nut and injector outlet

Procedure for replacing the hole washer

a) Loosen the union nuts *(186+189)* and remove the injector *(187)*. The nozzle is sealed with an O-ring at the end of the injector nozzle's *(188)* inner thread.
b) Pry out this washer with a small screwdriver.
c) Insert another hole washer or leave the hole washer out, as needed.

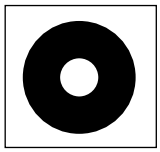

Figure 42: Hole washer

7.1.4 Setting the chlorine empty switch at the dosing hopper (option)

Overview chlorine dosing

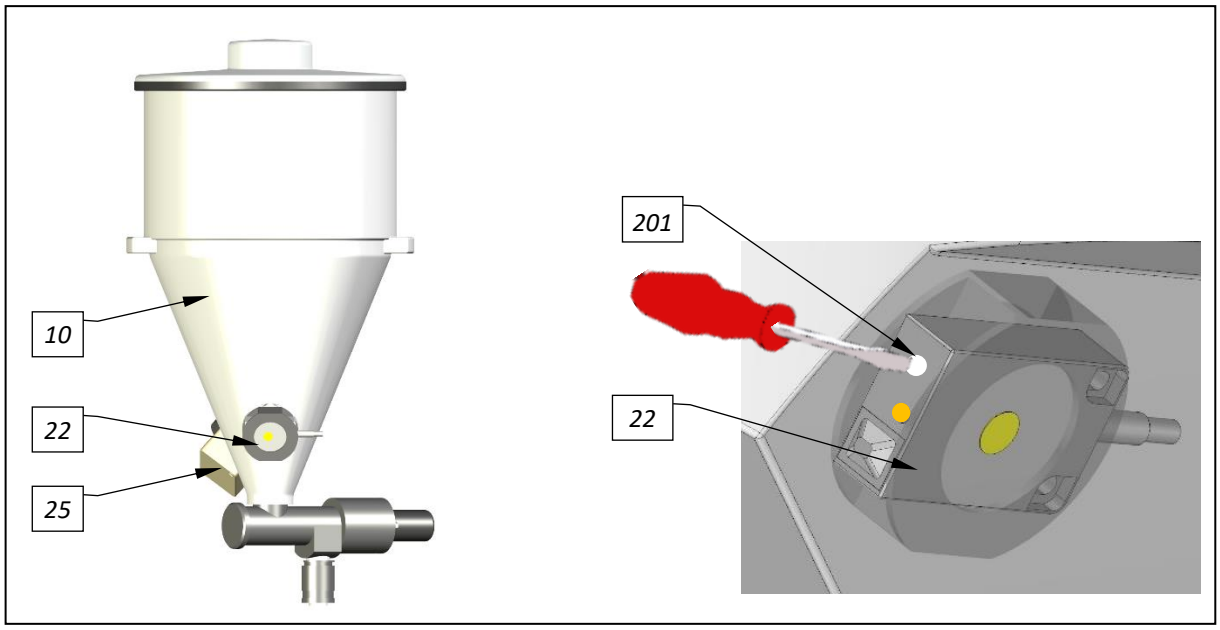

Figure 43: Dosing hopper / Chlorine empty switch

Key

10. Dosing hopper with lid	*201. Adjustment screw*
22. *Chlorine empty switch (option)*	25. *Solenoid knocker (with* connection socket)

Description

The *Chlorine empty switch* (option) *(22)* can be accessed after removing the housing's front cover. The small adjustment screw with LED can be seen on top of the narrow side. When the dosing hopper is empty, this LED must not be illuminated; the display **must show Chlorine empty**.

If the switch LED is illuminated, use a screwdriver to turn the adjustment screw *(201)* counter-clockwise until the LED goes out. The **Chlorine empty** fault indication appears at the control unit with a **6-second delay**. If the switch does not react to the adjustment potentiometer or if the adjustment screw has been destroyed, a new switch must be installed.

Procedure for adjusting the empty switch

a) Turn the adjustment screw clockwise until the LED at the empty switch lights up.
b) Then carefully turn it back until the LED goes out, followed by an additional 10° turn.
c) The **Chlorine empty** fault lights up in the display. After filling the dosing hopper above the switch level, the fault indication in the display goes out.

7.1.5 Replacing the dosing hose of the peristaltic pumps (acid or flocculation)

The pump hose in the pump is subject to mechanical and chemical stresses. Therefore, the pump hose must be checked at regular intervals in order to detect any damage in a timely fashion. See also maintenance protocol.

Overview; Individual components of the peristaltic pump

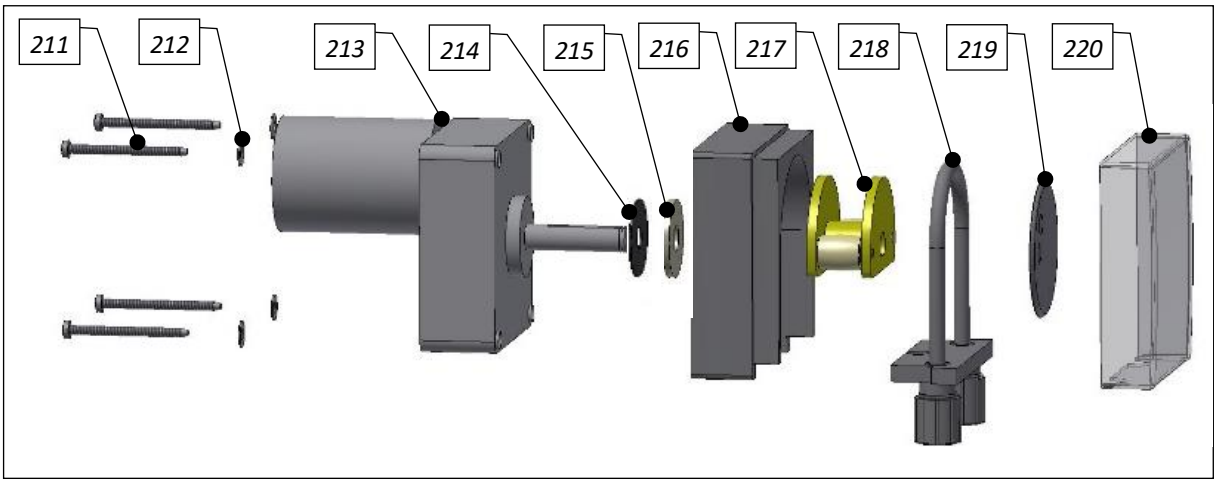

Figure 44: Individual components of the peristaltic pump

Key

211. Screw	212. Flat washer
213. Gear motor	214. Sealing washer EPDM
215. Felt washer	216. Pump casing
217. Roller carrier	218. Hose bracket with dosing hose (hose bracket kit)
219. Safety disc	220. Transparent protective cover

Replace hose bracket kit and roller carrier

For procedure, see *Chapter 5.2.1, page 38*.

Replace pump hose at the hose bracket

ATTENTION!

The new hose must be of the same material and have the same size and colour markings as the disassembled hose. The hose must not be twisted when inserted! The markings must be centred at the front (see picture).

Overview; Individual components of the hose bracket kit

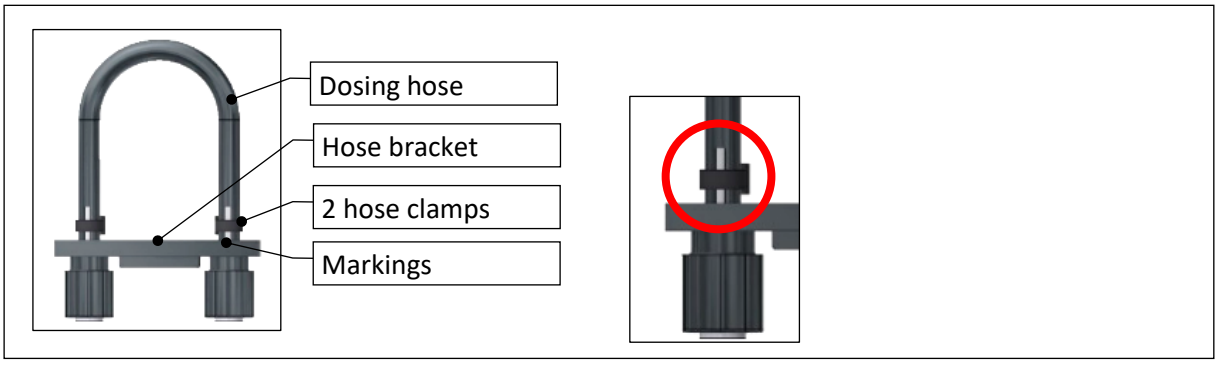

Figure 45: Hose bracket kit

Procedure

a) Disassemble the hose kit, see *Chapter 5.2.1, page 38*.
b) To replace the dosing hose, **carefully** cut the hose clamps with a sharp knife or pliers! **Never damage the hose nipples!**
c) Push the new dosing hose onto the hose nipples so that the **markings** on the hose ends are located in the **front!** This ensures that the hose is not twisted.

d) Attach the hose ends using the hose clamps and cut off the protruding ends of the hose clamps.
e) Install hose bracket kit, *see Chapter 5.2.1*.

7.1.6 Cleaning the dust extraction (option)



CAUTION!



Due to the excessive chlorine dust, personal safety equipment must be put on prior to starting the work: Protective gloves, apron, face protection.

Overview dust extraction

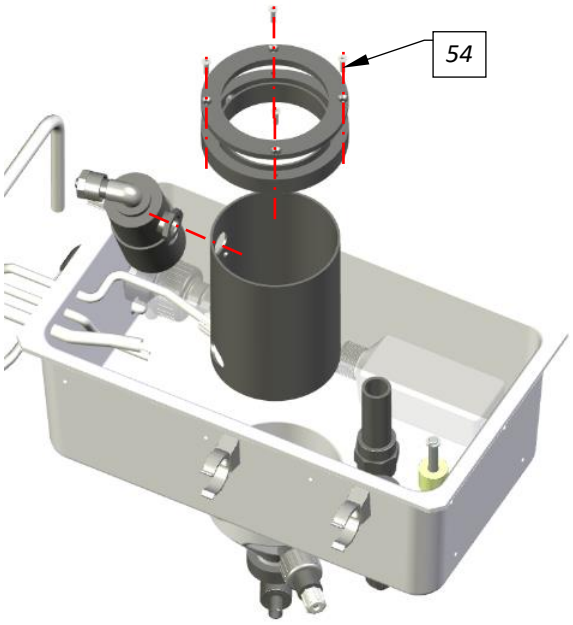



Figure 46: Dust extraction

Procedure

a) Remove, disassemble and clean the **flushing ring** *(54)* (see exploded drawing).
b) Then reassemble the flushing ring. Ensure that the **original screws are used again** during reassembly, since they are made of chloride-resistant material. Using other materials may cause the screws to corrode.

7.2 Fault removal

For opening the control housing, see *Chapter 4.5.1, page 35*.

TIP!

Faults are indicated in the display in the IN and OUT list by the appropriate symbol, or as text in the status line. See also the Operating Instructions for the control unit:

- For **CPR Touch XL**, Operating Instructions **"CPR-Touch XL Measuring and Control Unit" No. BA MR 001** (with measuring cell block), in Chapter "Fault removal".
- For **GRANUDOS Touch,** Operating Instructions **"GRANUDOS Touch Control Unit" No. BA SW 010,** in Chapter "Fault removal".
- **For GRANUDOS S5, Operating Instructions "GRANUDOS S5 Control Unit" BA No. BA SW 014,** in Chapter "Fault removal".

The flushing tub must not overflow when the GRANUDOS is shut down. Should this occur, one of the following elements is leaking:

- Floating valve → Replace diaphragm
- Suction pipe with switch body → Check for foreign objects
- Pressure retention valve in the measuring water line above the booster pump → Set valve, replace diaphragm, if necessary

TIP!

Encrustations of chlorine granulate at the dosing hopper can lead to malfunctions. Clean the dosing hopper according to the maintenance protocol.

8 Decommissioning – Storage – Disposal

8.1 General

In the event of decommissioning and risk of frost, the devices must be emptied completely and protected against frost!

8.2 Decommissioning of the GRANUDOS Flex dosing device

Procedure

a) Remove the suction lances from the dosing canisters and place them in a bucket filled with clean water.
b) Thoroughly remove any remnants of calcium hypochlorite and allow the system to run for an additional 10 minutes for flushing and cleaning.
c) Stop the dosing via the 

(CPR Touch XL + Touch) button or via the **(Control unit S5)** arrow keys (Dosing OFF). This causes the lines to be flushed.
d) Empty and thoroughly clean the dosing hopper.
e) Remove the dosing motor with the dosing screw from the dosing hopper *(see Chapter 7.1)*, thoroughly clean the dosing motor with dosing screw, and store the dosing screw in a dry place, if necessary – there must not be any scattered chlorine grains!
f) Remove the roller carrier from the peristaltic pumps in order to relieve the dosing hose *(see Chapter 7.1)*.
g) Thoroughly clean all parts of the GRANUDOS Flex.
h) If there is a risk of frost, drain all of the water-conveying parts; in particular, remember the suction pipe, the booster pump and the dust extraction pump.
i) Turn off the GRANUDOS Flex at the main switch.

See also *Chapter 8.3*

Recommissioning



ATTENTION!

During recommissioning, it is essential that you follow the instructions in the "Commissioning/ recommissioning" chapter and implement the points contained in the commissioning protocol.

8.3 Decommissioning of the buffer tank (option)

Procedure

a) Empty and clean the buffer tank.
b) Vacuum the sediment deposits from the buffer tank, if necessary.

8.4 Disposal of used parts and operating materials



Clean any removed, contaminated parts thoroughly and dispose of them, or have them recycled, in accordance with the regulations applicable at the operating location. Pay attention to the relevant instructions on the packaging for the operating materials. In case of doubt, information may be obtained from the authorities responsible for disposal at your location.

If this is not possible, dispose of the components/materials as hazardous waste.

9 Documents

9.1 Declaration of conformity

WDT Werner Dosiertechnik GmbH & Co. KG
Hettlinger Straße 17 | D-86637 Wertingen
Tel. 0049 8272 98697-0 | Fax 0049 8272 98697-19
info@werner-dosiertechnik.de | www.werner-dosiertechnik.de

Werner Dosiertechnik

EG-Konformitätserklärung
EC declaration of conformity
Déclaration de conformité UE

im Sinne der EG-Maschinenrichtlinie 2006/42/EG, Anhang II 1.A
as defined in the ECMachinery Directive 2006/42 / EC, Annex II, Part 1A
selon la directive européenne machines 2006/42 / CE, annexe II 1.A

Hersteller WDT - Werner Dosiertechnik GmbH & Co. KG
Manufacturer Hettlinger Str. 17
Fabricant 86637 Wertingen-Geratshofen

Beschreibung und Identifikation des Produktes:
Description and identification of the product:
Description et identification du produit :

Typenbezeichnung:	Art:
• GRANUDOS 10, GRANUDOS 10-CPR Touch, GRANUDOS 10-Touch, GRANUDOS 10-S5 • GRANUDOS 15, GRANUDOS 15-PC, GRANUDOS 15-S5 • GRANUDOS 45/100-PB, GRANUDOS 45/100-S4, GRANUDOS 45/100 Plus-V70 Touch, GRANUDOS 45/100-CPR Touch, GRANUDOS 45/100-Touch, GRANUDOS 45/100-S5, GRANUDOS 45/100 Plus-V80 Touch • GRANUDOS FB • GRANUDOS Flex, GRANUDOS Flex-CPR Touch, GRANUDOS Flex-Touch, GRANUDOS Flex-S5	Maschine

Funktion: Das Dosiersystem dient zur Desinfektion von Schwimmbadwasser mit Calciumhypochloridgranulat.
Function: The dosing system is intended for swimming pool disinfection using calcium hypochlorite granules
Fonction: Le système de dosage est utilisé pour la désinfection des piscines avec des granulés d'hypochlorite de calcium

Es wird ausdrücklich erklärt, dass das Produkt allen einschlägigen Bestimmungen der folgenden EG-Richtlinien entspricht:
It is expressly stated that the product complies with all relevant provisions of the following EC directives
Il est explicitement dit que le produit est conforme à toutes les dispositions pertinentes des directives CE suivantes :

2006/42/EG RICHTLINIE 2006/42/EG DES EUROPÄISCHEN PARLAMENTS UND DES RATES vom 17. Mai 2006 über Maschinen und zur Änderung der Richtlinie 95/16/EG (Neufassung)

Die folgenden harmonisierten Normen nach Artikel 7 (2) wurden angewandt:
The following harmonized standards as defined in Article 7 (2) were applied:
Les normes harmonisées suivantes selon l'article 7 (2) ont été appliquées :

EN ISO 12100:2010 Sicherheit von Maschinen - Allgemeine Gestaltungsleitsätze - Risikobeurteilung und Risikominderung
EN 60204-1:2018 Sicherheit von Maschinen – Elektrische Ausrüstung von Maschinen – Teil 1: Allgemeine Anforderungen
EN ISO 14120:2015 Anforderungen an Gestaltung und Bau von feststehenden und beweglich trennenden Schutzeinrichtungen

Die in der Gemeinschaft ansässige Person, die für die Zusammenstellung der technischen Unterlagen bevollmächtigt ist:
The designated person who is authorized to draw up the technical documentation:
La personne établie dans la communauté qui est autorisée à constituer le dossier technique:

Name: Werner Dosiertechnik GmbH & Co KG
Straße/Nr.: Hettlinger Straße 17
PLZ Stadt: 86637 Wertingen

WERNER Dosiertechnik GmbH & Co.KG 86637 Wertingen-Geratshofen Tel. 0 82 72/9 86 97-0 · Fax 9 86 97-19

Wertingen, 17.01.2023
Ort/Citiy/Place, Datum/Date

Unterschrift/signature Jochen Rieger, Director

CE SW 001-02 Konformitatserklärung GRANUDOS.docx

9.2 Wiring diagrams

The wiring diagrams for the standard version of the devices can be found in the respective Operating Instructions for the control unit:

- For GRANUDOS **CPR Touch XL**, Operating Instructions **“CPR-Touch XL Measuring and Control Unit”** No. **BA MR 001** in Chapter 9.2.
- For GRANUDOS **Touch**, Operating Instructions **“GRANUDOS Touch Control Unit”** No. **BA SW 010**, in Chapter 9.2.
- For GRANUDOS **S5**, Operating Instructions **“GRANUDOS S5 Control Unit”** No. **BA SW 014**, in Chapter 9.2.

The special wiring diagrams attuned to the optional furnishing of the GRANUDOS are located in the device’s terminal box.

9.3 Commissioning protocol

The commissioning protocol is included with the attached documents in the appendix.

9.4 Operation data sheet

The operation data sheet can be found in the respective Operating Instructions for the control unit:

- For GRANUDOS **CPR Touch XL**, Operating Instructions **“CPR-Touch XL Measuring and Control Unit”** No. **BA MR 001** in Chapter 9.4.
- For GRANUDOS **Touch**, Operating Instructions **“GRANUDOS Touch Control Unit”** No. **BA SW 010**, in Chapter 9.4.
- For GRANUDOS **S5**, Operating Instructions **“GRANUDOS S5 Control Unit”** No. **BA SW 014**, in Chapter 9.4.

9.5 Maintenance protocol

The maintenance protocol is included with the attached documents in the appendix.

9.6 Spare parts list, wear parts list

The spare parts and wear parts listed in the following are available from your specialist dealer. Please always include the exact product designation and the device serial number with you orders. The device serial number can be found on the control unit's housing.

Wear parts are excluded from the 2-year warranty. For these we assume a warranty of 1/2 year.

Spare parts list GRANUDOS Flex-CPR Touch XL, Flex-Touch and Flex-S5

Assembly group	Foot note	Designation	Code no.
Chlorine dosing	0	Dosing hopper GR Flex 5 kg	27555
	0	Dosing hopper GR Flex 15 kg	29357
	0	Lid for dosing hopper GR 10/GR Flex	12353
	0	Seal for lid D hopper GR 10/GR Flex	19293
	0	Dosing motor PLG rpm 30-12 with maintenance kit	13811
	0	Dosing motor PLG 30-35 rpm 0.6 m, with maintenance kit	11676
	0	Motor bracket GR 10/GR Flex PLG-d25	12799
	0	Dosing screw GR 10/GR d6/D19 with maintenance kit	12320 (X)
	0	Dosing pipe heated GR 10/ GR Flex cable 0.5 m	11556-2
	0	Solenoid knocker GR 10/GR Flex with connection socket complete	12868
Acid dosing	1/2	Acid pump GR 10 Sa complete	12374
	3	Acid pump Sa 3.2 GR Flex complete	30337
	0	Pump casing Sa	14140
	0	Roller carrier Sa blue	13039 (X)
	0	Hose kit 3.2x1.6 - Ph-Sa 2x	13413 (X)
	0	Suction set GR Flex red 3 m	30393
	0	Dosing valve acid GR	15099 (X)
	0	Maintenance kit for acid valve 3/8" KF	15764 (*)
In addition for flocculation	1	Hose kit Sa 0.8x1.6 Ph 2x	13482 (X)
	1/2	Suction set flocculation GR Flex	30391
	1/2	Dosing valve 1SK-S-4x1, including dosing lance	12774
	1	Dosing valve 1SK-S-4x1 365 mm	12657
	1/2	Valve rubber 4.2x1.6x20 mm 2 pc.	12230 (X)
Filter	0	Filter housing d75 with backwashing	30176
	0	Filter top d75 with ball valve d25	27806
	0	O-ring filter d75	11258 (*)
Control unit	1/2	Power pack SCHW-8, complete	26939
	1/2	Control board IO-SCHW-8, complete	26940
	3	Control board GR-S5 as of 09/2018	26672
	3	Display/control board, HMI 2 board complete-VK	26926
	3	Ribbon cable 10-pole connection control board S5 and display	25320
	1/2	Operating unit Touch 7	27080
	1	Measuring amplifier CPRT PR CL complete	24736
	0	Main switch GR 2xE/A 16A IP65	21839
	1/2	Fuse holder FPG1 5x20 IP67	21899
Floating valve	0	Floating valve d25 as of 5/05 complete	17006
	0	Diaphragm for floating valve	16367 (*)
	0	Float 0.25 l for floating valve	11621
	0	Level switch for flushing tub 3/ 8"	10496
Pump	0	Booster pump 1HM04-WDT	24618-1
	0	Booster pump; B-TM 61E-WDT	10332-1
	0	Mechanical seal for 2HMS3/4-A, 1HM04, 1HM06 SIC/SIC FPM	12800-1 (X)
	0	Mechanical seal for Cal; B-TM 61E	14848 (X)
	0	Condenser for booster pump 1HM04 (X)	14805
	0	Condenser for booster pump B-TM 61E	11579
	0	Pressure switch 1- 3 bar changeover contact complete	27349

Suction pipe	0	Suction pipe 1/2” d40 with switch body complete	25659
	1/2	Flow switch 2.1 m GR 10	26299
	0	Flow switch 18x1 inductive d40	25671
	0	Hose to suction pipe 10x2x180 Vi	11565-1 (*)
Injector	0	Injector 1/2” GR/PAK	29352
	0	Hole washer set for injector	11594
Cyclone	0	Dissolving cyclone GR Flex	29406
Maintenance kit	0	Seals, fuses, maintenance protocol	27604
Dust extraction	0	Solenoid valve	28646
	0	Dust extraction pump	28648
	0	Maintenance kit	27954

Footnotes regarding the spare parts list:
Parts marked with “0” are suitable for **all GRANUDOS Flex** types.
Parts marked with “1” are specifically designed for type **Flex-CPR Touch XL.**
Parts marked with “2” are specifically designed for type **Flex-Touch.**
Parts marked with “3” are specifically designed for type **Flex-S5.**

Parts marked with “*” are **included** in the **Maintenance Kit Code no. 27604**.
Parts marked with “X” are **wear parts**.

TIP!

The most common spare parts are listed in the spare parts list. For a complete overview, a detailed spare parts catalogue can be requested.

10 Appendices

- Commissioning protocol, **Flex-CPR Touch XL, Flex-Touch and Flex-S5**
- Maintenance protocol, **Flex-CPR Touch XL, Flex-Touch and Flex-S5**

Personal notes

Commissioning Protocol IP-080-EN
Granudos Flex-CPR Touch XL

Werner Dosiertechnik

This protocol is to be completed by the commissioning technician! Without a completed and signed commissioning protocol, all warranty claims become void!

Object: _____ Date: __/__/____

City, street, house number: _____

Device type: _____ Year of manufacture: _____ Serial number: _____

	Activity	Completed	Comment
1	**Dissolving unit and measuring cell block; (pay attention to a 6 second delay with the switches!)**		
1.1	Close ball valve at measuring cell intake (upstream of dirt filter)	☐	
1.2	Install the roller carriers for the peristaltic pumps	☐	
1.3	Connect the pH (acid) and flocculant (option) dosing canisters and fill in chlorine granulate	☐	
1.4	Vent the booster pump	☐	
1.5	Vent the dust extraction pump (option), output test for flushing and dust extraction actuator	☐	
1.6	Adjust the water flow in the dissolving unit	☐	
1.7	Check the pressure switch: Ball valve inlet closed, GR stops, fault display	☐	
1.8	Adjust the pressure switch	☐	
1.9	Adjust the water level in the flushing tub	☐	
1.10	Check the flow switch: Close ball valve drain, dosing stops, fault display; open the ball valve again	☐	
1.11	Check level switch min/max for flushing tub: Switch body up – dosing stops, fault display Switch body down – device stops, fault display	☐	
1.12	Check the function of the floating valve: Flow reacts gently	☐	
2	**Dosing technology for chlorine**		
2.1	Check heating: Dosing pipe warm?	☐	
2.2	Check the chlorine empty switch: Pull the empty switch from the bracket, display view	☐	
2.3	Check the function of the dosing motor: Programme output test chlorine	☐	
3	**Dosing technology for pH reducer**		
3.1	Check the empty switch: Pull the suction lance from the canister, display	☐	
3.2	Check the dosing pump: Programme output test acid	☐	
4	**Dosing technology for flocculant**		
4.1	Check the empty switch: Pull the suction lance from the canister, display	☐	
4.2	Check the dosing pump: Programme output test flocculation	☐	
5	**Control unit – after opening the control unit**		
5.1	Connector plugs are securely engaged	☐	
6	**Buffer tank (optional)**		
6.1	Check the function of the control and alarm switch in the tank: Display	☐	
6.2	Check the backflow prevention of the dosing pumps (on-site)	☐	
6.3	Check the backflow prevention of the filling	☐	

Commissioning Protocol IP-080-EN
Granudos Flex-CPR Touch XL

Werner Dosiertechnik

7	**Measuring cell block (see OI Part 2 Measuring and Control Unit No.: MR 001)**		
7.1	Insert the cleaning beads	☐	
7.2	Install electrodes	☐	
7.3	Open ball valve at measuring cell intake, set measuring cell flow	☐	
7.4	Set control parameters (if necessary)	☐	
8	**Other**		
8.1	Note down the inlet pressure and outlet pressure on the GRANUDOS	☐	Inlet pressure:___ barg; outlet pressure:___ barg
8.2	Clean the GRANUDOS system	☐	
8.3	Discuss and hand over operating instructions	☐	

Additional remarks:

Commissioning and instruction carried out by: _____

Instructed persons: _____

Signature of commissioner: _____

Countersigned by operator: _____

Commissioning Protocol IP-079-EN
Granudos Flex-Touch

Werner Dosiertechnik

This protocol is to be completed by the commissioning technician! Without a completed and signed commissioning protocol, all warranty claims become void!

Object: _____ Date: __/__/____

City, street, house number: _____

Device type: _____ Year of manufacture: _____ Serial number: _____

	Activity	Completed	Comment
1	**Dissolving unit (pay attention to a 6 second delay with the switches!)**		
1.1	Install the roller carriers for the peristaltic pumps	☐	
1.2	Connect the pH (acid) dosing canister and fill it with chlorine granulate	☐	
1.3	Vent the booster pump	☐	
1.4	Vent the dust extraction pump (option), output test for flushing and dust extraction actuator	☐	
1.5	Adjust the water flow in the dissolving unit	☐	
1.6	Check the pressure switch: Close ball valve inlet, device stops, fault display	☐	
1.7	Adjust the pressure switch	☐	
1.8	Adjust the water level in the flushing tub	☐	
1.9	Check the flow switch: Close ball valve drain, dosing stops, fault display; open the ball valve again	☐	
1.10	Check level switch min/max for flushing tub: Switch body up – dosing stops, fault display Switch body down – device stops, fault display	 ☐ ☐	
1.11	Check the function of the floating valve: Flow reacts gently	☐	
2	**Dosing technology for chlorine**		
2.1	Check heating: Dosing pipe warm?	☐	
2.2	Check the chlorine empty switch: Pull the empty switch from the bracket, display view	☐	
2.3	Check the function of the dosing motor: Programme output test chlorine	☐	
3	**Dosing technology for pH reducer**		
3.1	Check the empty switch: Pull the suction lance from the canister, display view	☐	
3.2	Check the dosing pump: Programme output test pH (acid)	☐	
4	**Control unit – after opening the control unit**		
4.1	All connector plugs are securely engaged	☐	
5	**Buffer tank (option)**		
5.1	Check the function of the control and alarm switch in the tank: Display	☐	
5.2	Check the backflow prevention of the dosing pumps (on-site)	☐	
5.3	Check the backflow prevention of the filling	☐	
6	**Other**		
6.1	Note down the inlet pressure and outlet pressure on the GRANUDOS	☐	Inlet pressure:___ barg; outlet pressure:___ barg
6.2	Clean the GRANUDOS system	☐	
6.3	Discuss and hand over operating instructions	☐	

Commissioning Protocol IP-079-EN
Granudos Flex-Touch

Werner Dosiertechnik

Additional remarks:

Commissioning and instruction carried out by: _____

Instructed persons: _____

Signature of commissioner: _____

Countersigned by operator: _____

Commissioning Protocol IP-078-EN
Granudos Flex-S5

Werner Dosiertechnik

This protocol is to be completed by the commissioning technician! Without a completed and signed commissioning protocol, all warranty claims become void!

Object: _____ Date: __/__/____

City, street, house number: _____

Device type: _____ Year of manufacture: _____ Serial number: _____

	Activity	Completed	Comment
1	**Dissolving unit (pay attention to a 6 second delay with the switches!)**		
1.1	Install the roller carrier for the peristaltic pump	☐	
1.2	Connect the pH (acid) dosing canister and fill it with chlorine granulate	☐	
1.3	Vent the booster pump	☐	
1.4	Vent the dust extraction pump (option), output test for flushing and dust extraction actuator	☐	
1.5	Adjust the water flow in the dissolving unit	☐	
1.6	Check the pressure switch: Ball valve inlet closed, device stops, fault display	☐	
1.7	Adjust the pressure switch	☐	
1.8	Adjust the water level in the flushing tub	☐	
1.9	Check the flow switch: Close ball valve drain, dosing stops, fault display; open the ball valve again	☐	
1.10	Check level switch min/max for flushing tub: Switch body up – dosing stops, fault display Switch body down – device stops, fault display	 ☐ ☐	
1.11	Check the function of the floating valve: Flow reacts gently	☐	
2	**Dosing technology for chlorine**		
2.1	Check heating: Dosing pipe warm?	☐	
2.2	Check the chlorine empty switch: Pull the empty switch from the bracket, display view	☐	
2.3	Check the function of the dosing motor: Programme output test chlorine	☐	
3	**Dosing technology for pH reducer**		
3.1	Check the empty switch: Pull the suction lance from the canister, display view	☐	
3.2	Check the dosing pump: Programme output test pH (acid)	☐	
4	**Control unit – after opening the control unit**		
4.1	All connector plugs are securely engaged	☐	
5	**Other**		
5.1	Note down the inlet pressure and outlet pressure on the GRANUDOS	☐	Inlet pressure:___ barg; outlet pressure:___ barg
5.2	Clean the GRANUDOS system	☐	
5.3	Discuss and hand over operating instructions	☐	

Commissioning Protocol IP-078-EN
Granudos Flex-S5

Werner Dosiertechnik

Additional remarks:

Commissioning and instruction carried out by: _____

Instructed persons: _____

Signature of commissioner: _____

Countersigned by operator: _____

Maintenance Protocol WP-080-EN
Granudos Flex-CPR Touch XL

Werner Dosiertechnik

This protocol is to be completed by the maintenance technician! We reserve the right to determine the warranty conditions when no completed and signed maintenance protocol is available.

Object: _____ Maintenance year: 20___

City, street, house number: _____

Device type: _____ Year of manufacture: _____ Serial number: _____

	Activity	Maintenance interval in months	Month 1	Month 2	Month 3	Month 4	Month 5	Month 6	Month 7	Month 8	Month 9	Month 10	Month 11	Month 12	Comment / additional tasks
1	**Dissolving unit**														
1.1	Check level switch, min+ max	6						☐						☐	
1.2	Check the pressure switch; adjust, if necessary	6						☐						☐	
1.3	Check the function of the flow switch	6						☐						☐	
1.4	Renew the floating valve diaphragm and the conical seal	12												☐	
1.5	Check and adjust the floating valve function	6						☐						☐	
1.6	Renew the hose to the suction pipe	12												☐	
1.7	Check the pump impeller and lid (only for Calpeda brand pumps)	12												☐	
1.8	Check capacitor of the booster pump; replace capacitor if electrical capacity <7µF	12												☐	
1.9	Mechanical seal - check for leaks	6						☐						☐	
1.10	Check the pump ball bearings – noise	6						☐						☐	
1.11	Clean the dirt filter	3			☐			☐			☐			☐	
1.12	Renew all O-rings	12												☐	
1.13	Nozzle diameter diffuser < 6.5 mm - check; (check passage with 6.5 mm drill)	12												☐	
2	**Dosing appliance for chlorine**														
2.1	Heating function: Dosing pipe warm	6						☐						☐	
2.2	Check the chlorine empty switch	6						☐						☐	
2.3	Clean and check the dosing screw	6						☐						☐	
2.4	Dosing motor: Renew the seals	12												☐	
2.5	Renew the dust cover seal	12												☐	
3	**Dosing appliance for acid**														
3.1	Check peristaltic pump for humidity and corrosion	1	☐	☐	☐	☐	☐	☐	☐	☐	☐	☐	☐	☐	
3.2	Check empty switch function	6						☐						☐	
3.3	Renew dosing hose	12												☐	
3.4	Renew the seals of the acid dosing valve	12												☐	

Maintenance Protocol WP-080-EN
Granudos Flex-CPR Touch XL

Werner Dosiertechnik

	Activity	Maintenance interval in months	Month 1	Month 2	Month 3	Month 4	Month 5	Month 6	Month 7	Month 8	Month 9	Month 10	Month 11	Month 12	Comment / additional tasks
4	**Dust extraction (option)**														
4.1	Completely check / clean the flushing ring of the suspensor, including the injector and flushing pipe	2		☐		☐		☐		☐		☐		☐	
4.2	Check the drill holes of the outlet connection for contamination and clean them	2		☐		☐		☐		☐		☐		☐	
4.3	Exchange the disconnect lever of the solenoid valve	12												☐	
5	**Dosing appliance for flocculation**														
5.1	Check peristaltic pump for humidity + corrosion	1	☐	☐	☐	☐	☐	☐	☐	☐	☐	☐	☐	☐	
5.2	Check empty switch function	6						☐						☐	
5.3	Renew dosing hose	12												☐	
5.4	Renew the seals of the flocculation dosing valve (on-site)	12												☐	
6	**Buffer tank (optional)**														
6.1	Check the function of the level switches, 4x buffer tank + 1x collecting tub	6						☐						☐	
6.2	Clean the buffer tank with water and diluted acid	12												☐	
6.3	Renew the active carbon in the filter	12												☐	
7	**Control unit**	12												☐	
7.1	Check all inputs	12												☐	
7.2	Check all outputs	12												☐	
7.3	Check and correct parameter settings	12												☐	
8	**Measuring cell block**														
8.1	Renew chlorine electrode, seal set	12												☐	
8.2	Renew redox electrode, seal set	12												☐	
8.3	Renew flow controller, maintenance kit	12												☐	
8.4	Check and clean the prefilter	12												☐	
8.5	DPD1 measuring, adjust free chlorine	12												☐	
8.6	pH measurement, renew + adjust pH electrode	12												☐	
9	**Other tasks**														
9.1	Thoroughly clean the dosing device	1	☐	☐	☐	☐	☐	☐	☐	☐	☐	☐	☐	☐	
9.2	Check dosing lines for firmness and wall thickness; renew, if necessary	12												☐	
10	**Maintenance tasks with each granulate filling**														
10.1	Check the function of the monitoring switches	F	☐	☐	☐	☐	☐	☐	☐	☐	☐	☐	☐	☐	
10.2	Remove encrustations from the dosing hopper	F	☐	☐	☐	☐	☐	☐	☐	☐	☐	☐	☐	☐	
10.3	Test chlorine, flocculation and acid dosing	F	☐	☐	☐	☐	☐	☐	☐	☐	☐	☐	☐	☐	
10.4	Check for pump noise	F	☐	☐	☐	☐	☐	☐	☐	☐	☐	☐	☐	☐	
10.5	Check the system for leaks	F	☐	☐	☐	☐	☐	☐	☐	☐	☐	☐	☐	☐	

Maintenance Protocol WP-080-EN
Granudos Flex-CPR Touch XL

Werner Dosiertechnik

Additional remarks:

Maintenance carried out and device checked for function: _____ Date: _____
Signature

Countersigned by operator: _____
Signature

Maintenance Protocol WP-079-EN
Granudos Flex-Touch

Werner Dosiertechnik

This protocol is to be completed by the maintenance technician! We reserve the right to determine the warranty conditions when no completed and signed maintenance protocol is available.

Object: _____ Maintenance year: 20___

City, street, house number: _____

Device type: _____ Year of manufacture: _____ Serial number: _____

	Activity	Maintenance interval in months	Month 1	Month 2	Month 3	Month 4	Month 5	Month 6	Month 7	Month 8	Month 9	Month 10	Month 11	Month 12	Comment / additional tasks
1	**Dissolving unit**														
1.1	Check level switch, min + max	6						☐						☐	
1.2	Check the pressure switch; adjust, if necessary	6						☐						☐	
1.3	Check the function of the flow switch	6						☐						☐	
1.4	Renew the floating valve diaphragm and the conical seal	12												☐	
1.5	Check and adjust the floating valve function	6						☐						☐	
1.6	Renew the hose to the suction pipe	12												☐	
1.7	Check the pump impeller and lid (only for Calpeda brand pumps)	12												☐	
1.8	Check capacitor of the booster pump; replace capacitor if electrical capacity <7µF	12												☐	
1.9	Mechanical seal - check for leaks	6						☐						☐	
1.10	Check the pump ball bearings – noise	6						☐						☐	
1.11	Clean the dirt filter	3			☐			☐			☐			☐	
1.12	Renew all O-rings	12												☐	
1.13	Nozzle diameter diffuser < 6.5 mm - check; (check passage with 6.5 mm drill)	12												☐	
2	**Dosing appliance for chlorine**														
2.1	Heating function: Dosing pipe warm	6						☐						☐	
2.2	Check the chlorine empty switch	6						☐						☐	
2.3	Clean and check the dosing screw	6						☐						☐	
2.4	Dosing motor: Renew the seals	12												☐	
2.5	Renew the dust cover seal	12												☐	
3	**Dosing appliance for acid**														
3.1	Check peristaltic pump for humidity and corrosion	1	☐	☐	☐	☐	☐	☐	☐	☐	☐	☐	☐	☐	
3.2	Check empty switch function	6						☐						☐	
3.3	Renew dosing hose	12												☐	
3.4	Renew the seals of the acid dosing valve	12												☐	

Key: F= with each granulate filling; 1 = monthly, 3 = every 3 months, 6 = every 6 months, etc.; ☒ = work completed

Maintenance Protocol WP-079-EN
Granudos Flex-Touch

Werner Dosiertechnik

	Activity	Maintenance interval in months	Month 1	Month 2	Month 3	Month 4	Month 5	Month 6	Month 7	Month 8	Month 9	Month 10	Month 11	Month 12	Comment / additional tasks
4	**Dust extraction (option)**														
4.1	Completely check / clean the flushing ring of the suspensor, including the injector and flushing pipe	2		☐		☐		☐		☐		☐		☐	
4.2	Check the drill holes of the outlet connection for contamination and clean them	2		☐		☐		☐		☐		☐		☐	
4.3	Exchange the disconnect lever of the solenoid valve	12												☐	
5	**Buffer tank (option)**														
5.1	Check the function of the level switches, 4x buffer tank + 1x collecting tub	6						☐						☐	
5.2	Clean the buffer tank with water and diluted acid	12												☐	
5.3	Renew the active carbon in the filter	12												☐	
6	**Control unit**	12												☐	
6.1	Check all inputs	12												☐	
6.2	Check all outputs	12												☐	
6.3	Check and correct parameter settings	12												☐	
7	**Other tasks**														
7.1	Thoroughly clean the dosing device	1	☐	☐	☐	☐	☐	☐	☐	☐	☐	☐	☐	☐	
7.2	Check dosing lines for firmness and wall thickness; renew, if necessary	12												☐	
8	**Maintenance tasks with each granulate filling**														
8.1	Check the function of the monitoring switches	F	☐	☐	☐	☐	☐	☐	☐	☐	☐	☐	☐	☐	
8.2	Remove encrustations from the dosing hopper	F	☐	☐	☐	☐	☐	☐	☐	☐	☐	☐	☐	☐	
8.3	Test chlorine and acid dosing	F	☐	☐	☐	☐	☐	☐	☐	☐	☐	☐	☐	☐	
8.4	Check for pump noise	F	☐	☐	☐	☐	☐	☐	☐	☐	☐	☐	☐	☐	
8.5	Check the system for leaks	F	☐	☐	☐	☐	☐	☐	☐	☐	☐	☐	☐	☐	

Additional remarks:

Maintenance performed and system checked for proper function: _____ Date: _____
Signature

Countersigned by operator: _____
Signature

Maintenance Protocol WP-078-EN
Granudos Flex-S5

Werner Dosiertechnik

This protocol is to be completed by the maintenance technician! We reserve the right to determine the warranty conditions when no completed and signed maintenance protocol is available.

Object: _____ Maintenance year: 20___

City, street, house number: _____

Device type: _____ Year of manufacture: _____ Serial number: _____

	Activity	Maintenance interval in months	Month 1	Month 2	Month 3	Month 4	Month 5	Month 6	Month 7	Month 8	Month 9	Month 10	Month 11	Month 12	Comment / additional tasks
1	**Dissolving unit**														
1.1	Check level switch, min + max	6						☐						☐	
1.2	Check the pressure switch; adjust, if necessary	6						☐						☐	
1.3	Check the function of the flow switch	6						☐						☐	
1.4	Renew the floating valve diaphragm and the conical seal	12												☐	
1.5	Check and adjust the floating valve function	6						☐						☐	
1.6	Renew the hose to the suction pipe	12												☐	
1.7	Check the pump impeller and lid (only for Calpeda brand pumps)	12												☐	
1.8	Check capacitor of the booster pump; replace capacitor if electrical capacity <7µF	12												☐	
1.9	Mechanical seal - check for leaks	6						☐						☐	
1.10	Check the pump ball bearings – noise	6						☐						☐	
1.11	Clean the dirt filter	3			☐			☐			☐			☐	
1.12	Renew all O-rings	12												☐	
1.13	Nozzle diameter diffuser < 6.5 mm - check; (check passage with 6.5 mm drill)	12												☐	
2	**Dosing appliance for chlorine**														
2.1	Heating function: Dosing pipe warm	6						☐						☐	
2.2	Check the chlorine empty switch	6						☐						☐	
2.3	Clean and check the dosing screw	6						☐						☐	
2.4	Dosing motor: Renew the seals	12												☐	
2.5	Renew the dust cover seal	12												☐	
3	**Dosing appliance for acid**														
3.1	Check peristaltic pump for humidity and corrosion	1	☐	☐	☐	☐	☐	☐	☐	☐	☐	☐	☐	☐	
3.2	Check empty switch function	6						☐						☐	
3.3	Renew dosing hose	12												☐	
3.4	Renew the seals of the acid dosing valve	12												☐	

Key: F= with each granulate filling; 1 = monthly, 3 = every 3 months, 6 = every 6 months, etc.; ☒ = work completed

Maintenance Protocol WP-078-EN
Granudos Flex-S5

Werner Dosiertechnik

	Activity	Maintenance interval in months	Month 1	Month 2	Month 3	Month 4	Month 5	Month 6	Month 7	Month 8	Month 9	Month 10	Month 11	Month 12	Comment / additional tasks
4	**Dust extraction (option)**														
4.1	Completely check / clean the flushing ring of the suspensor, including the injector and flushing pipe	2		☐		☐		☐		☐		☐		☐	
4.2	Check the drill holes of the outlet connection for contamination and clean them	2		☐		☐		☐		☐		☐		☐	
4.3	Exchange the disconnect lever of the solenoid valve	12												☐	
5	**Control unit**													☐	
5.1	Check all inputs	12												☐	
5.2	Check all outputs	12												☐	
5.3	Check and correct parameter settings	12												☐	
6	**Other tasks**														
6.1	Thoroughly clean the dosing device	1	☐	☐	☐	☐	☐	☐	☐	☐	☐	☐	☐	☐	
7	**Maintenance tasks with each granulate filling**														
7.1	Check the function of the monitoring switches	F	☐	☐	☐	☐	☐	☐	☐	☐	☐	☐	☐	☐	
7.2	Remove encrustations from the dosing hopper	F	☐	☐	☐	☐	☐	☐	☐	☐	☐	☐	☐	☐	
7.3	Test chlorine and acid dosing	F	☐	☐	☐	☐	☐	☐	☐	☐	☐	☐	☐	☐	
7.4	Check for pump noise	F	☐	☐	☐	☐	☐	☐	☐	☐	☐	☐	☐	☐	
7.5	Check the system for leaks	F	☐	☐	☐	☐	☐	☐	☐	☐	☐	☐	☐	☐	

Additional remarks:

Maintenance carried out and device checked for function: _____ Date: _____
Signature

Countersigned by operator: _____
Signature

Key: F= with each granulate filling; 1 = monthly, 3 = every 3 months, 6 = every 6 months, etc.; ☒ = work completed