Werner Dosiertechnik

EN

Operating and Installation Instructions

GRANUDOS dosing system VARIO PLUS-V80 Touch

with

GRANUDOS PLUS feed system



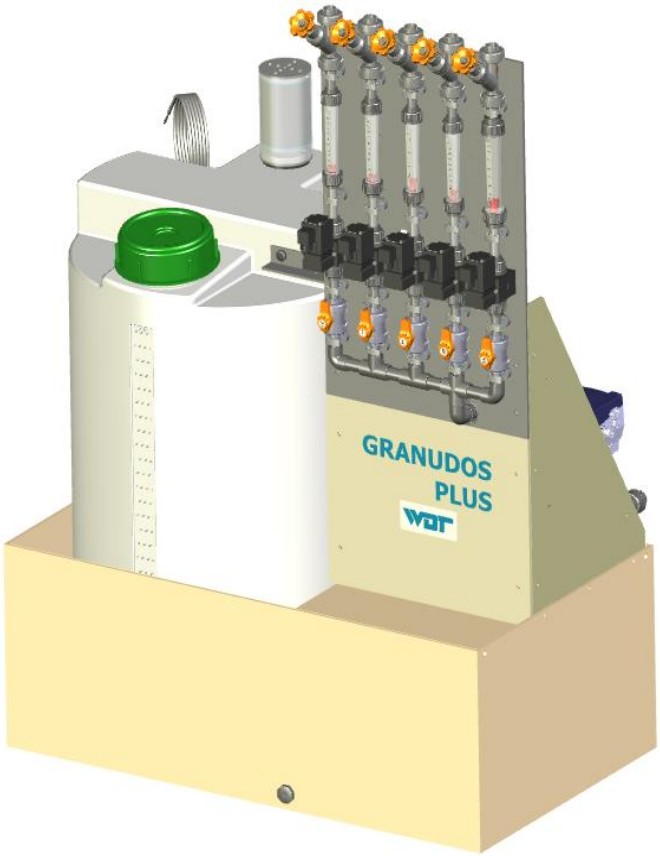

Table of contents

1 About these instructions / general 4
1.1 Scope of applicability 4
1.2 Target group 4
1.3 Symbols used 4
1.4 Warranty 5
1.5 Additional information 5
1.6 Information regarding support queries 5
2 Safety 6
2.1 Intended use 6
2.2 Safety notices 6
2.2.1 Handling of chemicals, risks to humans and the environment 6
2.2.2 Protective measures and rules of conduct 6
3 Product description – Functional description – (Scope of delivery) 8
3.1 Scope of delivery / accessories 8
3.2 Product description 8
3.2.1 Functioning of the GRANUDOS PLUS system 8
3.2.2 GRANUDOS with drum holder (standard) 9
3.2.3 Chlorine dosing (standard) 10
3.2.4 Acid dosing 11
3.2.5 Dissolving unit 12
3.2.6 Dust extraction (option) 14
3.2.7 Control unit (standard) 15
3.2.8 Feed system, including buffer tank (option) 15
3.2.9 Individual buffer tank, with / without protection tub (option) 18
3.3 Identification of the device / Identification plate 20
3.4 Technical data 21
3.4.1 Requirements for the calcium hypochlorite granulate 22
3.5 Transport / storage 22
4 Installation 23
4.1 Selecting the installation site 23
4.2 Installation instructions / installation suggestion 23
4.3 Mechanical installation 24
4.3.1 Installation of the GRANUDOS VARIO PLUS dosing device 24
4.3.2 Installation of the GRANUDOS PLUS feed system (feed system option) 25
4.3.3 Installation of the buffer tank (buffer tank option) with protection tub 25
4.4 Hydraulic installation 26
4.4.1 Connecting the GRANUDOS PLUS dosing device 26
4.4.2 Connecting the buffer tank (option) 27
4.4.3 Connecting the feed system (option) 27
4.5 Electrical installation 28
4.5.1 Opening and closing the housing 29
5 Commissioning 31
5.1 Commissioning - Remarks 31
5.2 Commissioning, setting of the operating parameters 31
5.2.1 Installation of peristaltic pump, roller carrier 31
5.2.2 Preparing acid dosing for operation 32
5.2.3 Attaching / changing the drum 33
5.2.4 Venting of the booster pump and the piping to the GRANUDOS 37
5.2.5 Initial filling of the feed system's buffer tank 37
5.2.6 Setting the water flow in the dissolving unit 38
5.2.7 Setting the water level in the flushing tub 39
5.2.8 Setting the pressure switch 39
5.2.9 Venting the feed pump 39
5.2.10 Setting the pump pressure at the feed pump/pressure retention valve (option) 40
5.2.11 Calculating the dosing lines' flow capacity 41
5.2.12 Determining the dosing performance for the granulate dosing 41
5.2.13 Venting the dust extraction pump (option) 43
5.2.14 Setting the dosing performance for chlorine and acid on the GRANUDOS 43
5.2.15 pH monitoring (option) 45

6 Operation / Use 46
6.1 Normal filling process during operation 46
6.2 The control unit - Version GRANUDOS PLUS-V80 Touch 46
6.2.1 Operation display – Operating status – Operation messages 46
6.2.2 Start –Booster pump delay and dosing delay 49
6.2.3 Operating mode - Automatic operation 50
6.2.4 Alarms 50
6.3 Main menu 51
6.3.1 Main menu → Login / Password 51
6.3.2 Main menu → Settings (overview) 52
6.3.3 Main menu → Service 58
6.3.4 Main menu → Log (event and data logging) 60
6.3.5 Main menu → Calibration (Option for design with internal pH monitoring) 62
6.4 Justage of external pH monitoring (type NE) 63
6.5 Replenishing consumables 63
7 Maintenance, care, fault 64
7.1 Device maintenance 64
7.1.1 Cleaning the dirt filter 64
7.1.2 Replacing the dosing screw and the dust gasket 64
7.1.3 Injector with suction pipe and flow switch 67
7.1.4 Maintenance and setting of the float control valve for the flushing tub inlet 68
7.1.5 Replacing and setting the Chlorine empty switch at the dosing hopper 68
7.1.6 Justage of the "No chlorine switch" on the dissolve cyclone 69
7.1.7 Replacing the dosing hose of the acid dosing pump 70
7.1.8 Cleaning the dust extraction (option) 71
7.2 pH measurement – calibrating the pH electrode (buffer tank) 71
7.3 Fault removal 72
8 Decommissioning – Storage – Disposal 76
8.1 General 76
8.2 Decommissioning of the GRANUDOS PLUS dosing device 76
8.3 Decommissioning the GRANUDOS PLUS feed system / buffer tank 76
8.4 Disposal of used parts and operating materials 76
9 Documents 77
9.1 Declaration of conformity 77
9.2 Wiring diagrams 78
9.2.1 Wiring diagram for power pack with connection to the I/O circuit board 80
9.2.2 Wiring diagram for GRANUDOS VARIO I/O circuit board 81
9.2.3 Wiring diagram for I/O circuit board SCHW 8 – on-site buffer tank 82
9.2.4 Wiring diagram for pH monitoring 83
9.2.5 Wiring diagram for feed system 230 V FU (Pump MPN130 FU) 84
9.3 Commissioning protocol 85
9.4 Operation data sheet 86
9.5 Maintenance protocol 90
9.6 Spare parts list 91
10 Appendices 92

Imprint:

All rights reserved
© Copyright by WDT – Werner Dosiertechnik GmbH & Co KG
Edition: see footer
Reproduction of any kind and translation into other languages, even in excerpts, is only permitted with the express authorisation of the company WDT - Werner Dosiertechnik GmbH & Co. KG. Subject to technical modifications
These operating instructions are an English translation of the original German version by the company WDT.

Responsible for the content:
Co. WDT - Werner Dosiertechnik GmbH & Co. KG
Hettlinger Str. 17; D-86637 Wertingen-Geratshofen
Phone: +49 (0) 82 72 / 9 86 97 – 0 Fax: +49 (0) 82 72 / 9 86 97 – 19
Email: info@werner-dosiertechnik.de

1 About these instructions / general

1.1 Scope of applicability

These instructions describe the functioning, installation, commissioning and operation of the **GRANUDOS VARIO PLUS-V80 Touch** dosing device and the **GRANUDOS-PLUS feed system** along with the corresponding accessories.
The Operating Instructions must be read carefully before use and kept on the device for direct use!

1.2 Target group

Only our authorised partners and people who have been trained in the device functions are permitted to work on the system.
Electrical connection work may only be carried out by appropriately trained specialists!

1.3 Symbols used

This document uses the following types of safety notices as well as general notices:



DANGER!
"DANGER" denotes a safety notice which, if disregarded, may lead to **serious** or **life-threatening injuries,** or **serious material damage**!



CAUTION!
"CAUTION" denotes a safety notice which, if disregarded, may lead to **injuries, damage to health** or **material damage**!



ATTENTION!
"ATTENTION" denotes a safety notice which, if disregarded, may lead to **material damage**!



CORROSIVE!
"Corrosive" denotes a safety notice which, if disregarded when handling chemicals, may lead to **injuries** or **material damage**.



ESD SENSITIVE!
"ESD SENSITIVE" denotes electronic components that may be damaged by electrostatic discharges. The generally accepted safety precautions for ESD-sensitive devices must be observed when handling the devices!



NOTICE!
A notice denotes information which, if disregarded, may lead to **malfunctions**.



Tip!
A "Tip" denotes information that may result in **improvements in the operating process**.



Mandatory sign
Use face protection!



Mandatory sign
Use protective gloves!
In accordance with DIN EN 374, protective gloves against chemicals and microorganisms.



Mandatory sign
Use protective apron!



Mandatory sign
Use protective boots!

1.4 Warranty

All WDT devices and systems are manufactured using modern production methods and are subject to comprehensive quality control. However, should there be a reason for complaint, any compensation claims shall be directed to the company WDT in accordance with the general terms and conditions of warranty

General terms and conditions of warranty
The company WDT assumes a 2-year warranty, starting with the commissioning, up to 27 months after delivery; subject to correct installation and commissioning with a completed and signed commissioning protocol.
Exempt from this are wear parts such as seals, hoses, diaphragms, dosing screws, electrodes, roller carriers and other parts that are subject to mechanical or chemical wear and tear. For these we assume a warranty of 1/2 year.
Our enterprise resource planning system requires an invoice for each delivery (including warranty services). When returning a defective component, upon review you will receive a corresponding credit, if applicable. We request a return within 14 days.
The costs for subsequent damage and for the processing of warranty claims are excluded.
There are no warranty claims for damage caused by frost, water and electrical overvoltage or by improper handling.



Tip!
In order to protect the warranty claims, please mail the completed commissioning protocol, along with the defective component, to the company WDT. Without the commissioning protocol, we reserve the right to an exclusion of warranty.



CAUTION!
In the event of any unauthorised modifications to the device, the warranty and product liability will be voided!

1.5 Additional information

Additional information concerning specific topics, such as designing of the dosing performance or description of the operating parameters, may be obtained from your specialist dealer, or directly from:

WDT Werner Dosiertechnik GmbH & Co KG
Hettlinger Strasse 17
D-86637 Wertingen/Geratshofen
Phone +49 8272 98697-0, Fax. +49 8272 98697-19
http: //www.werner-dosiertechnik.de

1.6 Information regarding support queries

The GRANUDOS VARIO PLUS-V80 series' control unit is subject to continued further development of both its firmware and hardware. We always strive to preserve the compatibility of the components used.

For spare part orders, we require the following data. You can find these on the identification plate.
- device designation
- device serial number
- year of manufacture

In addition, we require the following data for technical support queries. These are located in the menu item **Menu → Service → Info.**
- current DSP version
- current I/O version
- current http version

2 Safety

2.1 Intended use

The **GRANUDOS VARIO PLUS-V80 dosing device** and the **GRANUDOS PLUS feed system** may only be used for the purpose listed in the product description in Chapter *3.2 Product description*! Also pay attention to the locally applicable regulations concerning accident prevention, occupational safety and drinking water protection!



NOTICE

The standard GRANUDOS booster pump is **not suitable for saline water (seawater/brine pools)**. A special version is available for this case. Pay attention to this when placing your order!

2.2 Safety notices

Carefully read and pay attention to the operating instructions prior to installation and use of the device! Work on the device and changes in the settings may only be carried out by properly instructed persons!



IT safety
The GRANUDOS VARIO PLUS-V80 control unit makes remote display possible using network-enabled devices. The operator is responsible for ensuring that only authorised persons can access the device. The operator, or his authorised representative, is further responsible for the safety of all Internet and/or WLAN connections.

2.2.1 Handling of chemicals, risks to humans and the environment

In case of emergencies when handling chemicals, contact the emergency poison centre!

Emergency number:

Munich Emergency Poison Centre (or any other Poison Centre)

Phone: +49 89 19240

Excerpt from the Accident Prevention Regulations, GUV-V D 5

Installation rooms for chlorination systems and storage rooms
Section 3a. (1) Chlorination systems must be installed in lockable rooms and the chemicals intended for the chlorination must be stored in lockable rooms.
Re Section 3a Para. 1:
This requirement ensures that chlorination systems and chemicals shall be protected against weather effects and unauthorised access.
(2) Rooms in accordance with Para. 1 must not be intended for the permanent presence of persons.
Re Section 3a Para. 2:
..... A “permanent” presence is given when persons are present in the room for more than 2 hours per day. Repair and maintenance work on the chlorination system are exempt from this.

2.2.2 Protective measures and rules of conduct





DANGER! CORROSIVE! PROTECTIVE EQUIPMENT!
The GRANUDOS PLUS dosing system doses both the calcium hypochlorite granulate and the pH reducer (acid) from the delivery container.
These substances have a strong reaction when combined and release toxic chlorine gas outside of water. For this reason, the greatest possible care must be taken when working with chemicals and it is essential that personal safety equipment is worn: Face protection, protective gloves, protective apron, boots.





The chlorine granulate and the acid must not be mixed with each other or with other chemicals or substances!

Store chemicals so that they are not accessible to unauthorised persons.
When storing chemicals, pay attention to the chemical manufacturer's safety data sheets.

Fore more information, see the chemical manufacturer's safety data sheets!



CAUTION!
If water from the drinking water network is used to supply the GRANUDOS PLUS dosing device, for the protection of the water network a system separation must be installed according to the locally applicable legal provisions (for Germany and the EU: DIN EN 1717: 2011-08). This prevents a backflow of the water contaminated with chemicals in the event of a sudden pressure drop in the network!



ATTENTION! ESD SENSITIVE!
The electronic components in the device control units are sensitive to electrostatic discharge. For this reason, the generally accepted safety precautions for ESD-sensitive devices must be observed when handling the devices, including:

- **Discharge of personal static charge**
- **Dissipative clothing**
- **Disconnect the device from the voltage supply**

3 Product description – Functional description – (Scope of delivery)

3.1 Scope of delivery / accessories

The "GRANUDOS VARIO PLUS-V80 TOUCH"" dosing system comprises the following components:

- Standing column with a rotatable drum holder
- Dosing appliance for chlorine granulate
- Dosing appliance for acid
- Dissolving unit
- Control unit with 7" touch colour display

The following options are available for the dosing system

1. **Feed system** for distributing the chlorine solution among several basin cycles; this consists of:
   a) Buffer tank, including a protection tub, integrated in the feed system
   b) Conveyor device with pump and piping
   c) Distribution system / dosing lines for the chlorine solution. (Number freely selectable)
2. **Buffer tank** with or without protection tub
3. **pH monitoring** to check the pH value
4. **Dust extraction** for granulates containing dust
5. **Remote display and remote access**
6. **Lifting device**
7. Filter venting set 1/4" with ball valve and hose, (for dirt filter d75)

3.2 Product description

Dosing system for the disinfection of swimming pool water with calcium hypochlorite. This is particularly well-suited for multi-pool systems.

3.2.1 Functioning of the GRANUDOS PLUS system

NOTICE:
At a minimum, the piping of the dosing lines from the distribution system to the dosing points must be executed in the dimension **d20 mm, in PVC PN16** (thick-walled) with **ball valve and non-return valve**. For longer dosing lines (above approx. 15 m) and a flow above approx. 400 l/h it is recommended to install a line with the next highest nominal width.

ATTENTION!
Non-return valves must be installed on site at all dosing points to prevent swimming pool water from flowing back!

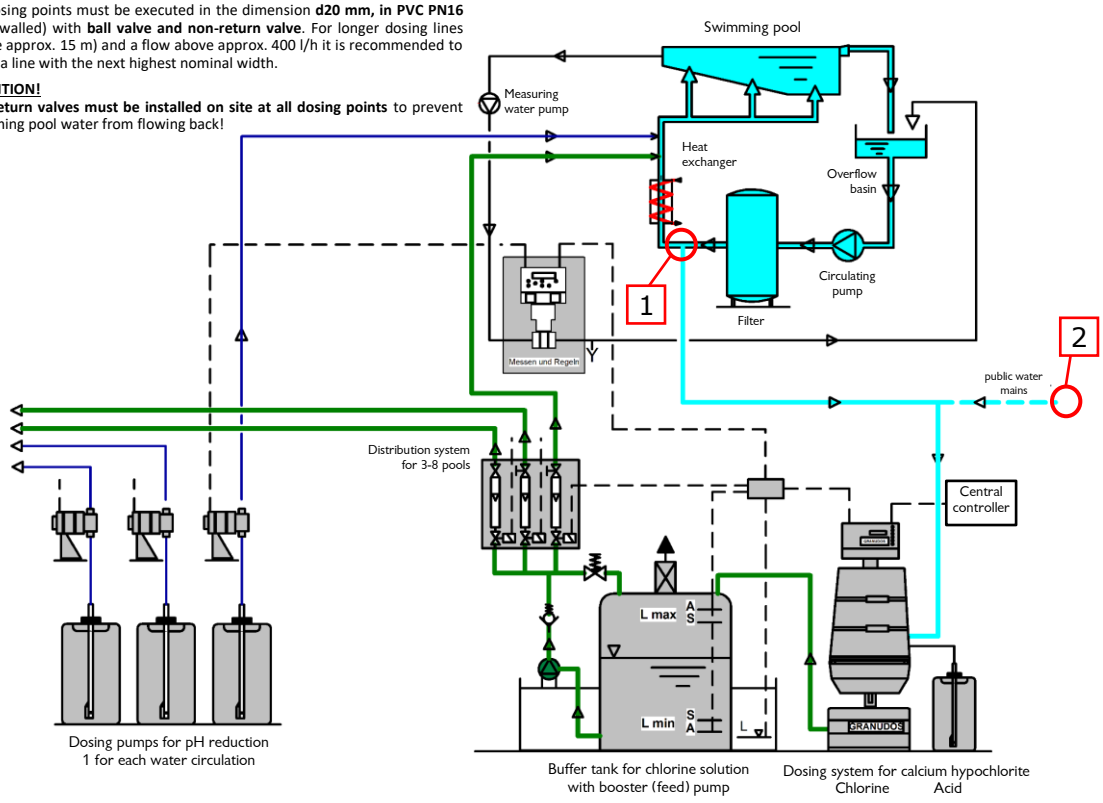

Figure 1, Flow diagram of the GRANUDOS PLUS dosing system

The GRANUDOS PLUS dosing device uses calcium hypochlorite granulate with water and acid to prepare a pH-neutral, very low-concentrate chlorine solution (maximum 0.35% chlorine) for the disinfection of swimming pool water. The chlorine granulate and the acid needed for neutralisation are dosed in turns with intermittent pauses into the dissolving unit, which is subject to a continuous flow of water. The dosed chemicals are completely dissolved and fed into the feed system's buffer tank via an injector system.

3.2.2 GRANUDOS with drum holder (standard)

A rotatable drum holder is mounted on the stable standing column. The chlorine drum (*14*) is set on this drum holder and strapped to the rear wall with 2 tension bands (*02*); for this, the drum is held by a cross bar at the reinforced grip edge. The safety belt (*03*) is closed with the clamping lever (*05*), additionally securing the drum in the turning device. After rotating the drum holder with the clamped-on drum, the drum is in the dosing position. The spring bolt (*09*) is used to lock the drum holder in the drum change or dosing position. The acid pump (*10*) for dosing the pH reducer and the dirt filter for the dissolving unit's booster pump are installed on the standing column.

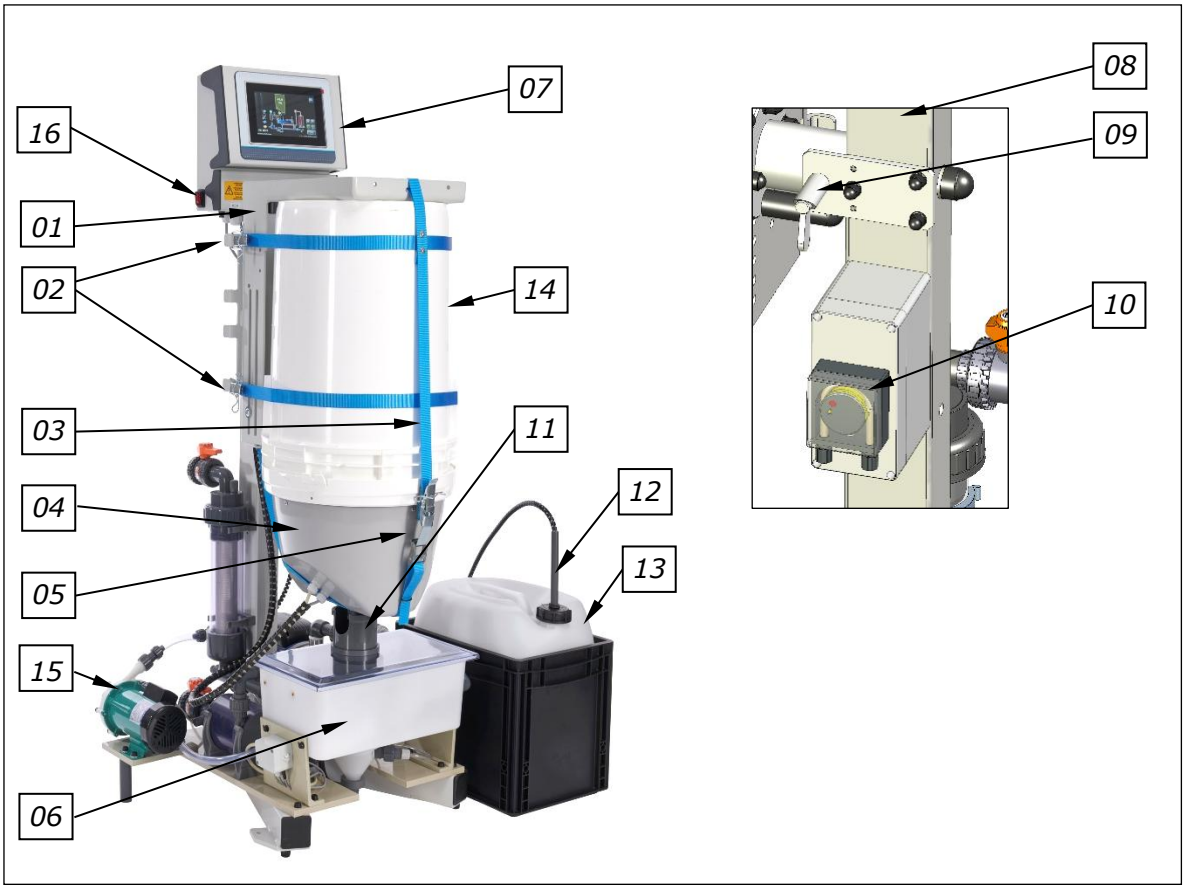

Figure 2, GRANUDOS PLUS with dust extraction

01. Drum holder
02. Tension bands
03. Safety belt
04. Dosing head
05. Clamping lever for the safety belt
06. Dissolving unit
07. Control unit
08. Identification plate (on the right side of the upright pipe)
09. Spring bolt for the turning device
10. Acid pump (covered)
11. Dust protection, protective pipe
12. Suction lance for acid
13. Acid canister with collecting basin
14. Chlorine drum
15. Dust extraction
16. Main switch (lateral)

3.2.3 Chlorine dosing (standard)

The illustrated dosing head is screwed on the chlorine drum. It is used for dosing the chlorine granulate into the dissolving unit.

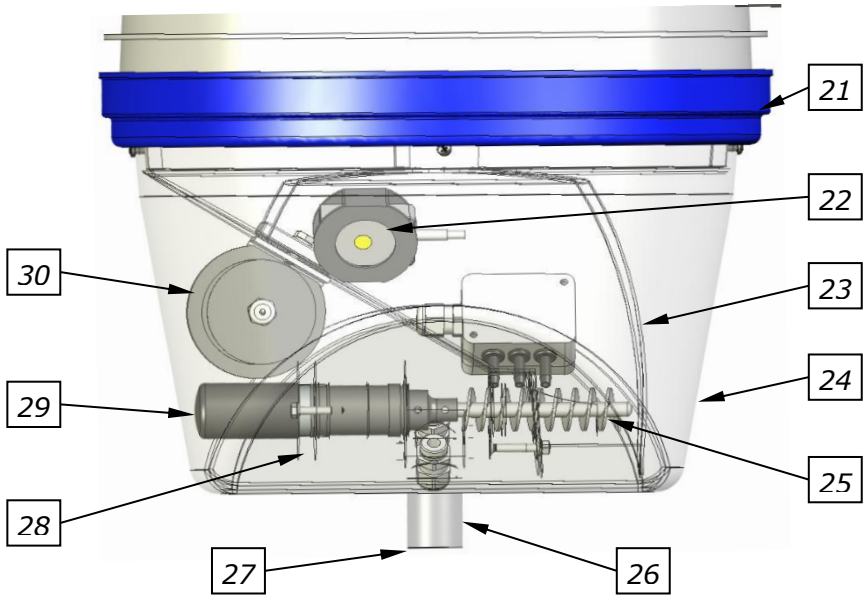

Figure 3, Dosing head for chlorine granulate

21. Screw ring (with drum thread)
22. Chlorine empty switch
23. Dosing hopper
24. Protective cover
25. Dosing screw
26. Dosing pipe, heated
27. Sealing washer
28. Motor bracket with screw tube
29. Dosing motor
30. Solenoid knocker

The dosing appliance consists of the dosing hopper (23) with cover (24), installed on the chlorine drum, and the dosing unit. The dosing unit consists of:

- The dosing motor with flange (29), the dosing screw (25),
- the motor bracket (28)
- the heated dosing pipe (26)

The heating of the dosing pipe prevents the condensation of water vapour, which could lead to a dosing blockage.

The dosing screw (25) transports the calcium hypochlorite granulate from the Dosing hopper (23) into the Flushing pipe (44) of the underlying dissolving unit. A Solenoid knocker (30) is installed for breaking up the chlorine granulate; during each dosing process, the solenoid knocker delivers a short blow to the dosing hopper, thus preventing the granulate from bridging across the dosing screw.
The chlorine dosing is organized in alternating cycles with the acid and is monitored (see *Chapter 3.2.6, Control unit)*. The drum's chlorine content is continuously calculated by the control unit, and a “Reserve indication”  appears on the display if the set dosing amount has been exceeded. The granulate fill level is shown on the display. Once the “Chlorine empty switch” (22) triggers, the display shows the “Chlorine empty” notification  and the dosing is stopped.

The dosing performance is set in **Main menu → Settings**. It must be selected at a level high enough to ensure that sufficient chlorine solution is available even if it is requested for all pools. **A dosing setting below 50% is not possible!**

3.2.4 Acid dosing

The acid dosing in the GRANUDOS PLUS is used to completely dissolve the chlorine granulate and to neutralise the chlorine solution: a low-concentrate, neutral hypochlorous acid is generated. For this purpose, a peristaltic pump is installed as standard. During commissioning, the acid dosing must be coordinated with the chlorine dosing so that the chlorine solution in the buffer tank has a pH value between 6.8 and 7.2. The correct dosing ratio is set after measuring the chlorine solution's pH value. In that case, the calcium hypochlorite solution is completely dissolved. The solution is practically clear and lacks a strong chlorine odour. If the pH value is too low, the solution has a strong chlorine odour and becomes more corrosive. If the pH value is too high, the solution is cloudy and precipitation/deposits form in the buffer tank and in the dosing lines.

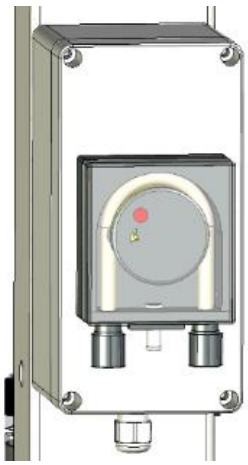

Figure 4, Acid dosing pump

The peristaltic pump sucks the acid from an acid canister. The fill level in the acid canister is continuously calculated and a "Reserve indication"  appears on the display if the set dosing amount has been exceeded. The acid fill level is shown on the display. Once the "Acid empty switch"  triggers, the dosing is switched off; otherwise, the generation of hypochlorous acid is no longer guaranteed.

As with the chlorine, the dosing performance is entered in the menu item **Menu → Settings**.
37-50% sulphuric acid is recommended as acid.



Tip!

In special cases, e.g., if the water is very hard and/or has a high pH value and/or a high dosing performance is required, it is recommended to use hydrochloric acid instead of sulphuric acid. This prevents the potential formation of gypsum residue due to high sulphate concentrations in the buffer tank (option).



CAUTION!

With a hydrochloric acid concentration of more than 10%, a Viton hose must be inserted in the peristaltic pump! This hose must be replaced every 6 months!

3.2.5 Dissolving unit

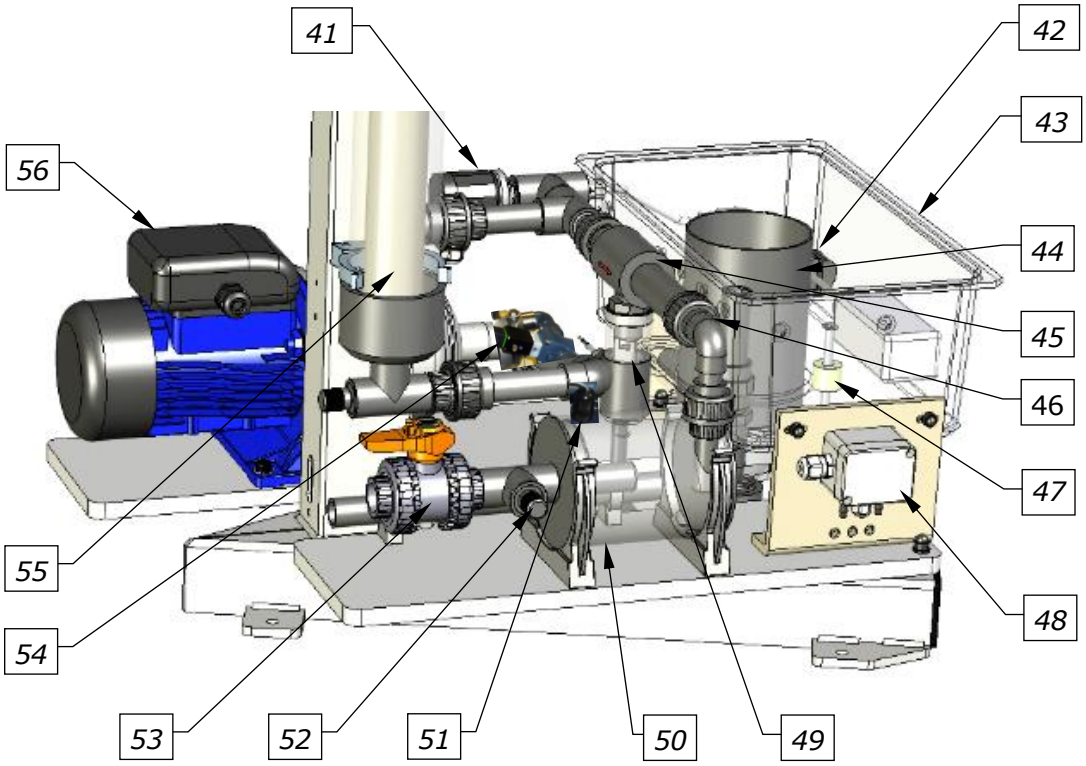

Figure 5, Dissolving unit

41. Pressure switch
42. Float control valve at flushing tub inlet with float
43. Flushing tub
44. Flushing pipe
45. Injector
46. Pipe union with hole washer
47. Level switch min./max. Flushing tub
48. Connection socket for the switches
49. Flow switch for flushing tub
50. Dissolving cyclone
51. No chlorine switch / sensor on the cyclone
52. Connection for manometer
53. Outflow ball valve
54. Control valve for the dissolving water
55. Dirt filter d75 mm
56. Booster pump (various designs)

Dosing the chlorine solution causes the level in the buffer tank to drop. Once the starting level has been reached in the buffer tank, the *Control valve for the* dissolving water *(54)* opens and the booster pump starts. The dissolving water is separated downstream of the booster pump *(56)*: A partial flow is directed into the flushing tub *(43)* via the float control valve *(42)*. From there, it is suctioned off by the injector *(45)*, together with the additional chemicals dosed in the flushing pipe *(44)*. The calcium hypochlorite granulate is kept in circulation in the dissolving cyclone *(50)* until it has been completely dissolved by the water and the acid. An optical sensor *(51)* records the dosed chlorine granulate, which can be seen in the cyclone shortly after the dosing has started. If no chlorine is recorded 8 seconds after the start of the second dosing cycle, the dosing is stopped and the control unit reports the fault.

Changes in the dissolving unit's water supply that cause the dissolving unit to no longer operate properly are recorded by the level switch *(47)*, the flow switch *(49)* and the pressure switch *(41)*. In these cases, the dosing of chemicals and also the booster pump, if applicable, will be turned off to prevent potential subsequent damage.

The pressure switch *(41)* is installed in the booster pump's pressure line. It switches off the GRANUDOS in case of a pressure drop, e.g., during an intake of air, to prevent the pump from running dry.
In addition, a monitoring switch or a contact from the central unit can be connected to switch off the filling in the event of a fault in the filter system, e.g., no flow in the clean water line.

The flow switch *(49)* installed in the injector's *(45)* suction line is of essential importance for the GRANUDOS's operational safety. If the suction capacity (minimum 150 l/h) is too low, the switch body that has been pushed upward by the upward flow in the suction pipe drops and the chemical dosing is turned off. This ensures that dosing only occurs in vigorously flowing water and the two chemicals **cannot** meet in the open area.

At the same time, the *Control valve for the* dissolving water *(54)* blocks the inlet to the flushing tub in the event of a downtime or malfunction of the device.
The flushing tub overflow *(43)* conducts the - chlorine-free - excess water that might occur in case of the "Water max" fault to the duct.

To prevent the chlorine granulate and the acid from meeting and reacting with each other in the open part of the dissolving unit, the following safety package has been installed:

- The dosing of the two chemicals, chlorine granulate and acid, occurs in set cycles with pauses between the dosing processes. The power supply of the two dosing motors is locked via a relay system in such a way that **both motors can never be running at the same time**!
- The water supply and water flow are monitored by the pressure switch *(41)*, level switch *(47)* and flow switch *(49)*.
- Dosing only takes place when the water flow is ensured.
- In the event of any deviation from the set target values, the dosing system is turned off and a corresponding fault indication is generated.



ATTENTION!

The use of sulphuric acid is generally possible up to a concentration of 50%. For higher concentrations or when using other acids (e.g., hydrochloric acid), the changed dosing performance and/or increased corrosiveness must be taken into account! We recommend consultation with the manufacturer!

3.2.6 Dust extraction (option)

The dust extraction is used to reduce the intrusion of dust in the vicinity of the device. The use of granulates with an increased dust content may lead to a minor dust discharge at the device. This will subsequently settle on the protective cover. The dust extraction is based on the water jet nozzle (injector) principle

The flushing of the dust extraction is used for the automatic cleaning of the flushing pipe and the dust extraction's injector. During operation, it is possible that **the chlorine dosing and the flushing are active simultaneously**. This constitutes a **normal operating state**.

The flushing interval is controlled via a relay. This is preset ex works to 10 s flushing and 1 h pause. To change the *parameters, see Chapter 6.3.2.5, Main menu → Settings → Dust extraction* (option).

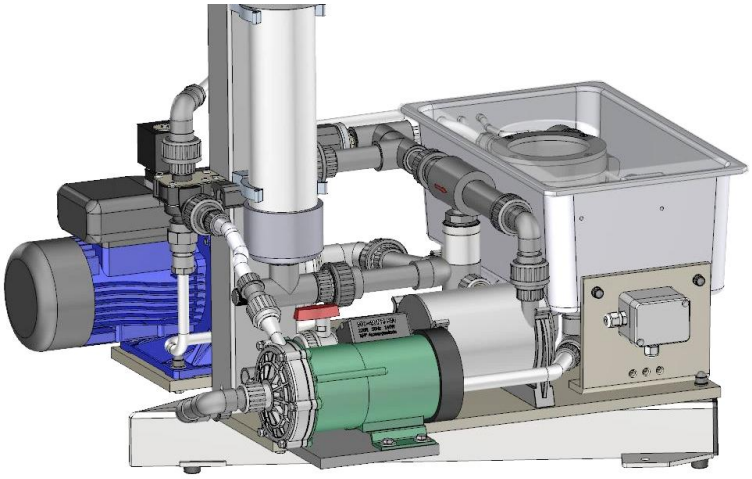

Figure 6, Dissolving unit with dust extraction

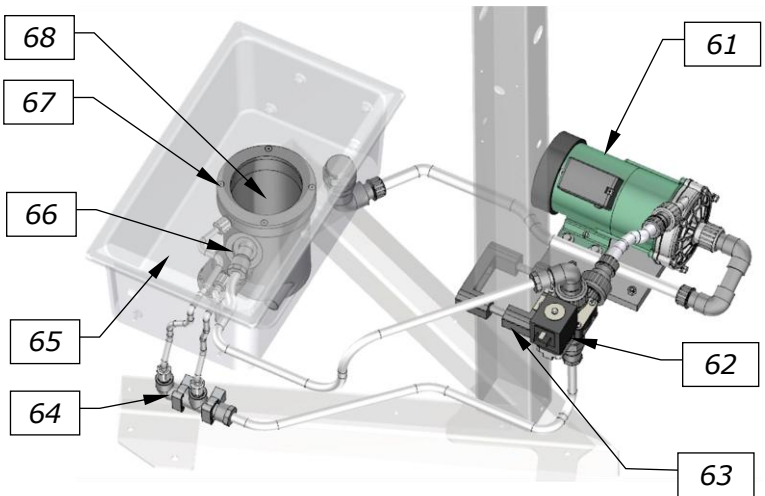

Figure 7, Dust extraction

61. Dust extraction pump
62. Solenoid valve
63. Pipe clamp
64. Flushing water distributor
65. Flushing tub lid (transparent)
66. Injector
67. Flushing ring assembly group
68. Flushing pipe / dust extraction swirler assembly group

3.2.7 Control unit (standard)

Control unit (version GRANUDOS PLUS-V80 Touch)
The control unit is contained in a dust- and splash-proof housing (protection class IP 54). External switches and remote fault indications are connected in the lower housing part.
The control unit of the GRANUDOS PLUS-V80 dosing system is simple and easy to operate using a 7" touch screen.

The operating states and faults are displayed directly via the function display as an active flow diagram. For a detailed description, see Chapter 6. Operation.

The start display:

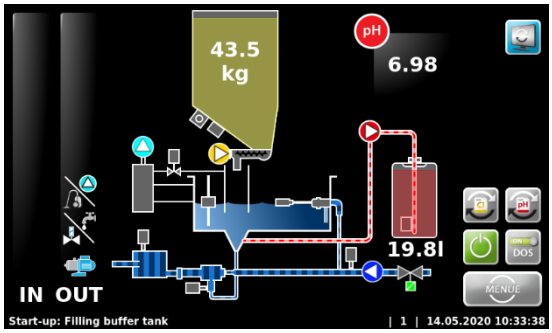

Figure 8, Start display

3.2.8 Feed system, including buffer tank (option)

The GRANUDOS PLUS feed system is used to distribute the pH-neutral chlorine solution produced by the GRANUDOS PLUS dosing device to the individual basin cycles. Via the pressure retention valve, the feed pump generates an even inlet pressure for the dosing lines' supply, irrespective of the number of opened dosing lines. This ensures the same flow rate, i.e., the same chlorine dosing performance, each time the control valves are opened.

As standard, the feed system consists of:

a) a 300 l buffer tank, including protection tub
b) solenoid centrifugal pump with PVDF head and piping, and
c) a distribution system / dosing lines for the chlorine solution.

Optional accessories:

d) pH monitoring

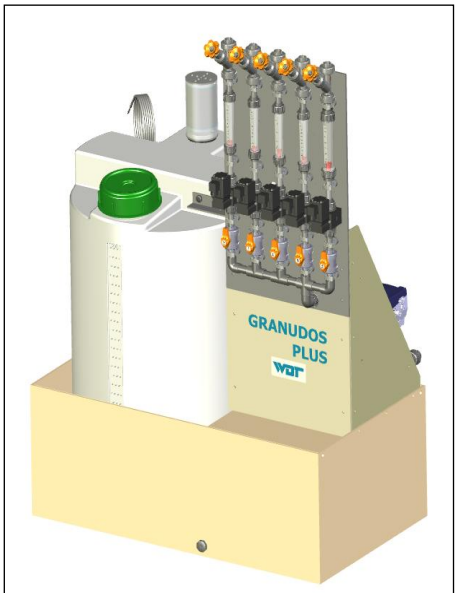

Figure 9, Feed system

Re a) Buffer tank integrated in the feed system

The buffer tank with a 300 l capacity has an integrated quadruple level switch. The buffer tank filling exclusively occurs via these level switches

See also Figure 14, Buffer tank without protection tub, *Chapter 3.2.9.*



Figure 10, Integrated buffer tank, rear view

Re b) feed pump with piping

The magnetically coupled feed pump *(75)* with PVDF head is resistant against the corrosive chlorine solution.

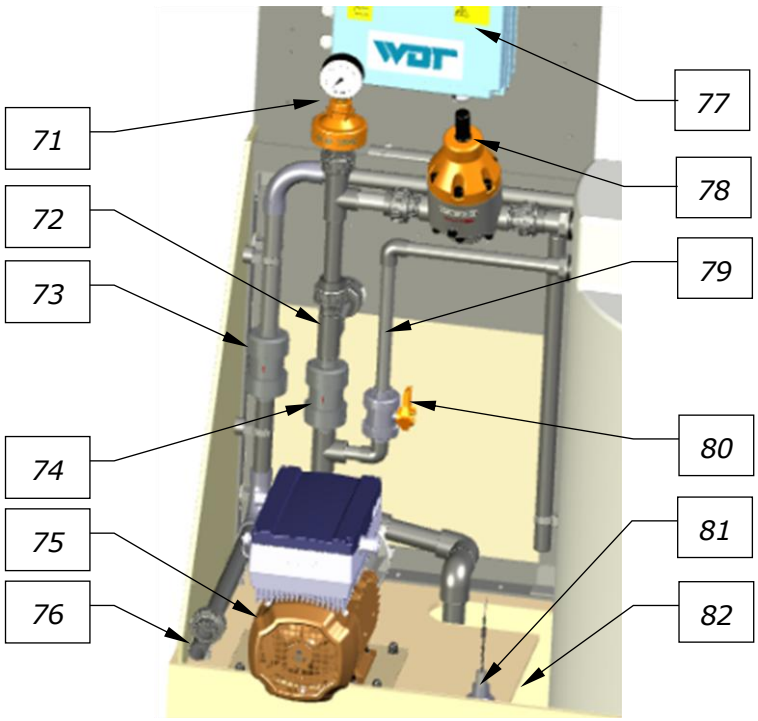

Figure 11, feed pump piping

71. Diaphragm seal with manometer
72. T-piece to the distributor plate
73. Non-return valve in the filling line
74. Non-return valve on the feed pump
75. Feed pump
76. Filling the GRANUDOS
77. Terminal box for connecting the control valves
78. Pressure retention valve
79. Vent line for the feed pump
80. Ball valve for venting
81. Alarm switch for the protection tub
82. Buffer tank suction line with ball valve

3 feed pumps with and without frequency converter are available for different pressure situations in the treatment technology (see *Chapter 3.4, Technical data).*

Re c) Distribution system / dosing lines for the chlorine solution

The entire distribution system for the chlorine solution is installed on the feed system and fully preassembled.

The dosing lines consist of the following components:

91. Angle seat valves or dosing ball valves for setting the required flow capacity or dosing performance
92. Flow meter to illustrate the flow capacity
93. External pH monitoring (option)
94. Solenoid valves, controlled by the measuring and control technology, for free chlorine
95. Shut-off ball valves
96. Screw connection from the feed pump

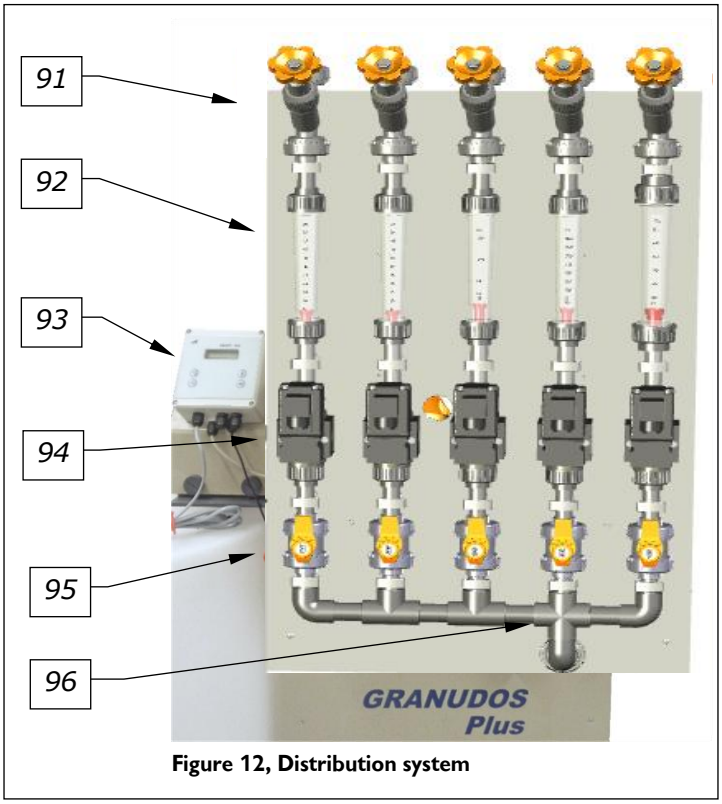

Figure 12, Distribution system

The required flow capacity is determined based on the solution's chlorine concentration and the required dosing performance of free chlorine. See *Chapter 5.2.12,* Determining the dosing performance for the granulate dosing

In the event of a fault, a relay system interrupts the power supply for the control valves if the feed pump is switched off due to a fault indication in the GRANUDOS system. This causes the control valves to close.



ATTENTION!

As additional protection against back-flowing water, non-return ball valves must be installed in the dosing lines on-site!

Re d) pH monitoring (option)

If the chlorine dosing fails during the filling of the buffer tank, an acidic chlorine solution is produced, due to the consistently set acid dosing. This acidic chlorine solution would then be dosed by the measuring and control technology when chlorine is requested, leading to a drop of the pH value in the pool. To prevent this, the chlorine solution's pH value is measured. If the pH value no longer meets the set target range, the filling is stopped and an alarm is indicated.

101. Ball valve for venting
102. pH electrode
103. Adapter PG13.5 for the pH electrode
104. Feed pump head
105. Connection to the suction piping in the buffer tank

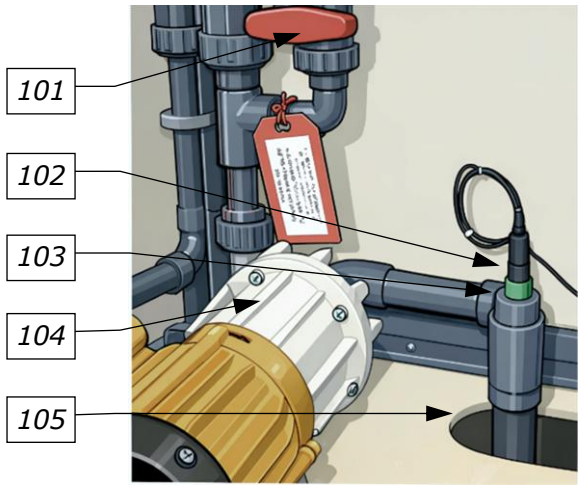

Figure 13, pH measuring probe

- The pH electrode is directly connected to the GRANUDOS' control unit.
- The pH electrode's cable must be installed in a separate protective pipe at a distance of no less than 10 cm from live cables.
- If the feed system is located more than 10 m away from the dosing device, the external pH monitoring should be installed directly on the feed system. (An excessively long electrode cable could transmit fault impulses to the control unit).

Length of electrode cable:

- Standard 5 m
- Option 10 m

3.2.9 Individual buffer tank, with / without protection tub (option)

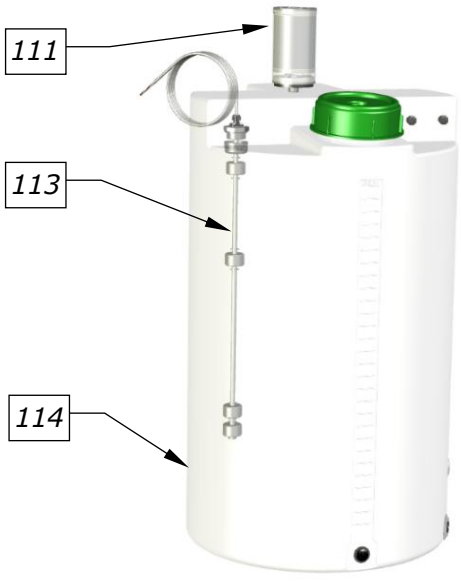

Figure 14, Buffer tank without protection tub

111. Activated carbon filter
112. Protection tub PP (not shown)
113. Quadruple level switch, from bottom to top:
    - Buffer tank minimum level alarm
    - "Start filling" level
    - "Stop filling" level
    - Maximum level alarm
114. Buffer tank 300 l PE

Filling procedure

- When the buffer tank's lower control level "Start filling" is reached, the GRANUDOS PLUS starts filling the buffer tank.
- At the buffer tank's upper control level "Stop filling", the filling is stopped; it is then followed by a flushing cycle to clean the dissolving unit: initially for 20 seconds with acid, followed by 20 seconds with water only.
- At the buffer tank's "Minimum alarm" level, the feed pump is switched off and an alarm message is shown on the display; the alarm output is active.
- At the buffer tank's "Maximum alarm" level, an alarm message is shown on the display. The feed pump continues to run to prevent a potential backflow from the dosing lines.

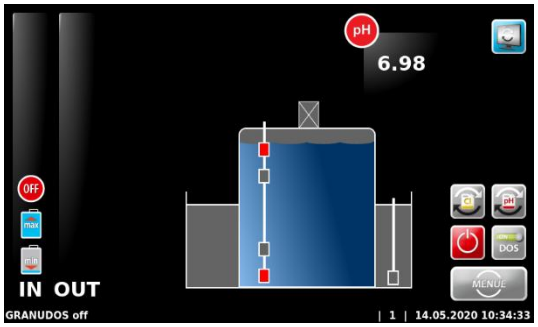

Figure 15, Fault indication minimum alarm and maximum level alarm at the buffer tank

Contact positions

When the container is half full, the level switches' contacts are set as follows:

Level position	Contact
Minimum level alarm	open
"Start filling" level	open
"Stop filling" level	open
Maximum level alarm	closed

An activated carbon filter (111) is screwed on the buffer tank. It is used to clean the chlorine-containing air when filling the buffer tank and for venting during draining.

The buffer tank is located in the protection tub (112, not shown). If the level switch (47) in the protection tub indicates a fault, the following errors are possible:

a) There is a leakage at the buffer tank or in the piping.
b) The upper level switch in the buffer tank to stop the filling **and** the "Maximum level" alarm are not functioning.
c) Backflow from a dosing line out of the swimming pool when the feed pump is switched off, non-closing solenoid valve **and** leaking non-return valve.

In each case, the GRANUDOS dosing device switches off, the feed pump continues to run or restarts to prevent an overflow of the protection tub in the cases b) and c).



ATTENTION!

The switch in the tub must be checked once per year! – See maintenance protocol.

3.3 Identification of the device / Identification plate

Identification plate for GRANUDO PLUS-V80 Touch

Enter the data from the identification plate of your device here.

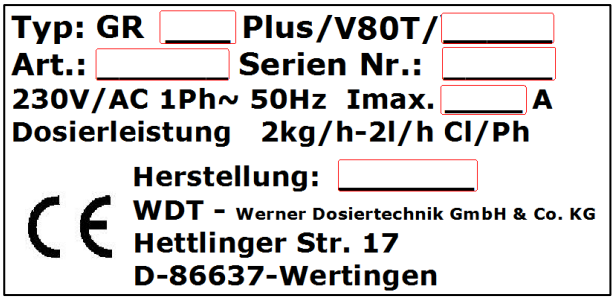

Field 1: Complete the type identification
Field 2: Enter drum type
Field 3: Code no.:
Field 4: Serial no.:
Field 5: Enter current rating
Field 6: Enter date of manufacturing

Identification plate for GRANUDOS PLUS feed system

Enter the data from the identification plate of your device here.

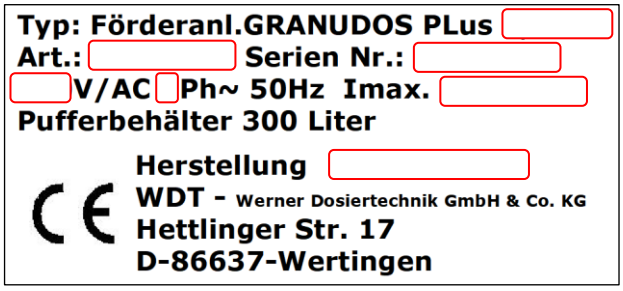

Field 1: Complete the type identification
Field 2: Enter code number
Field 3: Enter serial number
Field 4: Enter supply voltage in volt
Field 5: Enter number of phases (ph)
Field 6: Enter maximum current rating in ampere
Field 7: Enter date of manufacturing

3.4 Technical data

	GRANUDOS PLUS VARIO V80	GRANUDOS PLUS feed system
Dimensions and weights:		
Dimensions	W 60 cm, D 70 cm, H 140 cm	W 120 cm, D 80 cm, H 200 cm
Device space requirement (base)	W 130 cm, D 90 cm	W 120 cm, D 90 cm
Space requirement, including operation and maintenance	W 130 cm, D 170 cm	W 120 cm, D 170 cm
Empty weight / operating weight	approx. 50 kg / 100 kg	approx. 70 kg / 370 kg
Connection data		
Electrical connection data	230 VAC/50 Hz ± 10%, 350 W, I max. 3.15 A, safety plug	230 VAC, 50 Hz, 0.55 kW 400 VAC, 50 Hz, 1.1 kW
Fuse front panel	Fine wire fuse 6.3 A slow	
Hydraulic connection data	Inlet DN20 Outflow DN20	Inlet DN20 Outflow DN15
Required duct connection	At least DN25	
Protection class	IP54	IP54
Operating pressure Required inlet pressure Counter-pressure	max. 2.5 barg min. 0.2 barg 0 - 1.4 barg (depending on inlet pressure)	max. 1.7 barg
Dissolving water supply	From the swimming pool water cycle with booster pump (b-pump): 0.3 kW, 230 VAC at least 0.2 barg With mains water without b-pump: at least 3.0 barg **(EU: System separation required!)**	
Operating data:		
Dosing performance 2 kg Dosing performance 4 kg	Chlorine: 1 - 2 kg/h (1) Acid: max. 3 l/h Chlorine: 2-4 kg/h (1) Acid: max. 3 l/h	
Sum of the set water flow of all dosing lines		max. 1200 l/h
Filling capacity of the dosing device	max. 1200 l/h	
Number of dosing lines	—	3-8 pieces, further dosing lines possible on additional plate
Booster pump	Lo.: 390 W, 230 V, 1.95 A; Cal.: 330 W, 230 V 2.5 A	
Feed pump		up to 1barg: 0.55 kW, 230 VAC, 50 Hz, 1 Ph up to 1.7 bar: 1.1 kW, 230 VAC, 50 Hz, 1 Ph with FU up to 1.5 barg: 1.1 kW, 400 VAC, 3 Ph (3)
Medium temperature Ambient temperature Humidity technical room	5°C to 35°C 5°C to 35°C max.: 70% (non-condensing)	5°C to 35°C 5°C to 35°C max.: 70% (non-condensing)
Hypochlorous acid concentration	Granudos 2 kg: max. 0.2% Granudos 4 kg: max. 0.35%	
Room ventilation (in and out)	According to the locally applicable provisions, e.g., DIN 19643 – BGR-108 in Germany	
Material	Standing column: Steel, galvanised and painted Other functioning parts: PVC , PE Seals: EPDM, Viton	PVC or PE, PP Seals: Viton

Footnotes regarding the technical data

1) The dosing performance for the chlorine granulate depends on the type of granulate: In case of a high dust content in the granulate or with very coarse materials > 3 mm, the dosing performance may be significantly reduced. See specification in *Chapter 3.4.1.*

2) A separate electric supply with 400 VAC, 3 ph is required.

3.4.1 Requirements for the calcium hypochlorite granulate

Based on over 40 years of experience with the dosing of calcium hypochlorite granulate it is apparent that the quality of the granulate has a significant impact on the dosing's functional safety. Here, we define our minimum requirements for the calcium hypochlorite granulate. If these quality criteria are met, a proper dosing operation can be assumed in this regard.

The following can be checked upon receiving the granulate to gain an initial impression of the quality:

- The granulate must be white.
- Free of clumps.
- No strong chlorine odour must be present when opening the drum.

Specification:

- Calcium hypochlorite concentration: → higher than 70%
- Water-insoluble ($Ca(OH)_2$, $CaCO_3$): → less than 4%
- Humidity: → less than 5%

Grain size:

- Dust: → smaller than 0.15 mm (100 mesh) → smaller than 1%
- Fraction of coarse particles: → larger than 2.5 mm (8 mesh) → smaller than 5%

3.5 Transport / storage

Please check the devices immediately upon receipt for potential transport damage.



ATTENTION!
The systems and devices can be damaged by frost or high temperatures. Do not store systems and devices next to objects with strong heat emission or in direct sunlight. The device may only be transported and stored in its original packaging. Please ensure careful handling.

Storage of chemicals



DANGER!
Pay attention to the chemical suppliers' safety data sheets! In addition, please pay attention to the provision regarding the storage of chemicals TRGS 510.

General

- Store chlorine dry and cool
- Keep a chlorine supply at hand for less than 6 months
- Use a suitable collecting basin! Check the locally applicable regulations for collecting basins without type approval. In Germany, for example: For collecting basins with an individual volume of more than 20 litres, a building authority approval is required.

4 Installation

4.1 Selecting the installation site

Pay attention to the following in regard to the installation site:

a) A freely accessible place of installation should be selected to facilitate operations and subsequent maintenance tasks. The system must be installed on a suitable, level foundation.
b) Comply with the dimensions for the floor drain and the temperature specifications for the ambient air and medium in accordance with *Chapter 3.4 Technical data*. No flammable vapours, dust or gases may be present in the immediate vicinity of the device.
c) The device must not be exposed to the elements. It may not be installed outdoors. The system must be protected from frost and direct sunlight.
d) An electricity grid connection and a duct connection must be available.
e) The installation site must comply with the accident prevention regulations (Germany BGR-GUV-R 108) and should not be accessible to unauthorised persons. A separate storage space must be available for the chemicals.
f) It must be possible to vent and aerate technical areas so that hazardous substances do not occur in health-hazardous concentrations (from accident prevention regulations BGR-GUV-R 108). A strong air current at the dosing device must be avoided.
g) Collecting basins must be available for the chemical canisters and the buffer tank, if necessary.

4.2 Installation instructions / installation suggestion

- Remove transport safety devices
- Attach warning and notice signs in accordance with the locally applicable accident prevention regulations (Germany: BGR-GUV-R 108) at the designated positions.

NOTICE

The standard GRANUDOS booster pump is **not suitable for saline water (seawater/brine pools)**. A special version is available for this case. Pay attention to this when placing your order!

Suggested installation:

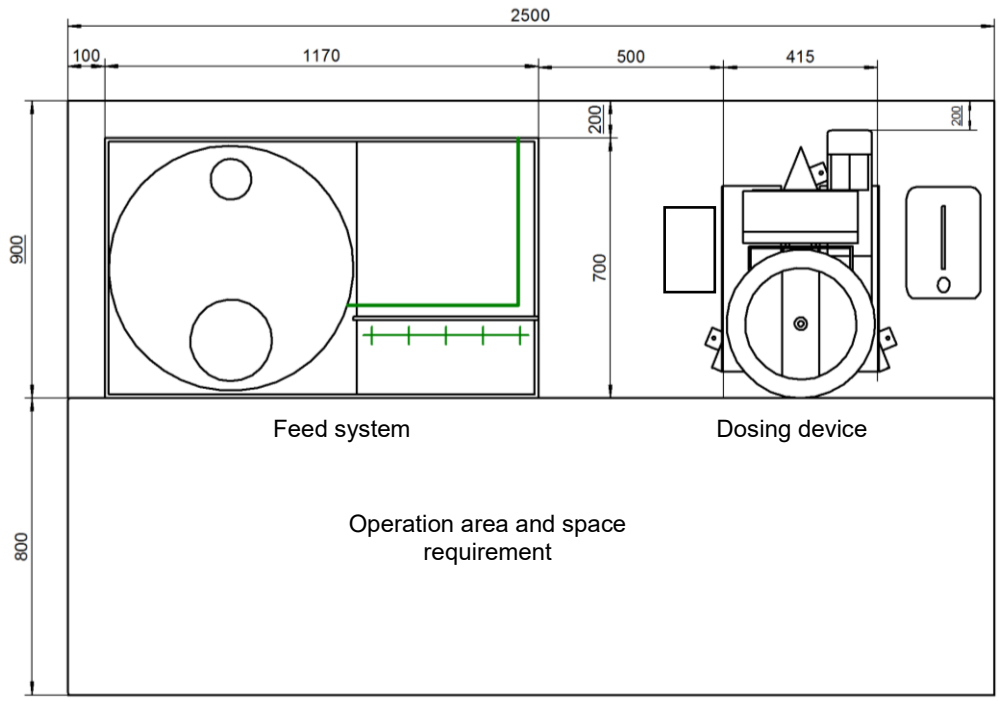

Figure 16, Suggested installation, including space requirements

4.3 Mechanical installation

The dosing device is delivered completely pre-assembled, including the control unit and the dirt filter.
Ensure that there is sufficient clearance for operating and servicing the device.

4.3.1 Installation of the GRANUDOS VARIO PLUS dosing device

Place and align the GRANUDOS PLUS dosing device on a suitable, level foundation in the technical room.



ATTENTION!
Once the installation has been completed, attach the GRANUDOS PLUS to the floor, using the 3 enclosed screws!

Installation material

Spare parts bag with manometer and washers for the injector	Accessories for acid pump
	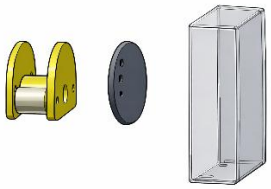

4.3.2 Installation of the GRANUDOS PLUS feed system (feed system option)

The feed system should preferably be set up to the left of the dosing device (see suggested installation). If a different positioning is required, or if the feed system is located on a different height level than the dosing device, the manufacturer should be consulted prior to installation.
Place and align the feed system on a suitable, level foundation in the technical room.
Ensure that there is sufficient clearance for operating and servicing the device!

Feed system:
121. Distributor plate with dosing lines
122. Mounting plate
123. Pipe union to the feed pump
124. Diaphragm seal with manometer
125. Carry handle

Procedure:
The distributor plate was dismantled for transport.
a) Place the distributor plate (*121*) on the lower mounting plate (*122*) and screw it to the frame.
b) Connect the pipe union (*123*) to the feed pump behind the mounting plate.
c) Screw the diaphragm seal *(124)* together with the pre-installed manometer into the T-piece.
d) The 4 carry handles (*125*) at the corners of the protection tub may be cut off.

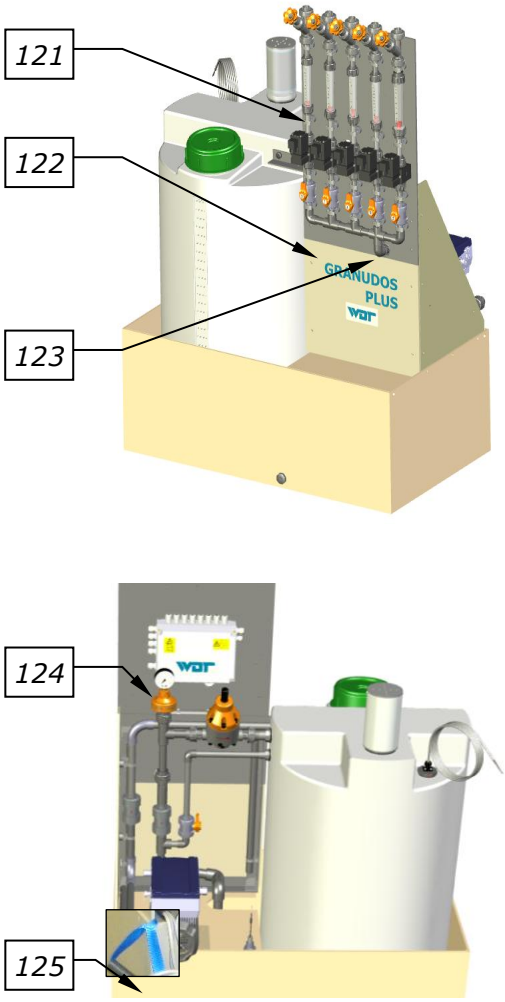

Figure 17, Feed system, front and rear view

4.3.3 Installation of the buffer tank (buffer tank option) with protection tub

- The buffer tank may only be operated with a suitable protection tub. (On-site protection tub, if necessary.)
- Place and align the protection tub on a suitable, level foundation in the technical room.
- Place the empty buffer tank in the protection tub and check for secure footing.
- Ensure that there is sufficient clearance for operating and servicing the device.

4.4 Hydraulic installation

NOTICE

When using Captura swimming pool filters, an automatic vent must be installed in the swimming pool water cycle. Otherwise, faults may occur in the GRANUDOS system. For a more detailed coordination, please contact WDT.

4.4.1 Connecting the GRANUDOS PLUS dosing device

Integration into the water circulation:

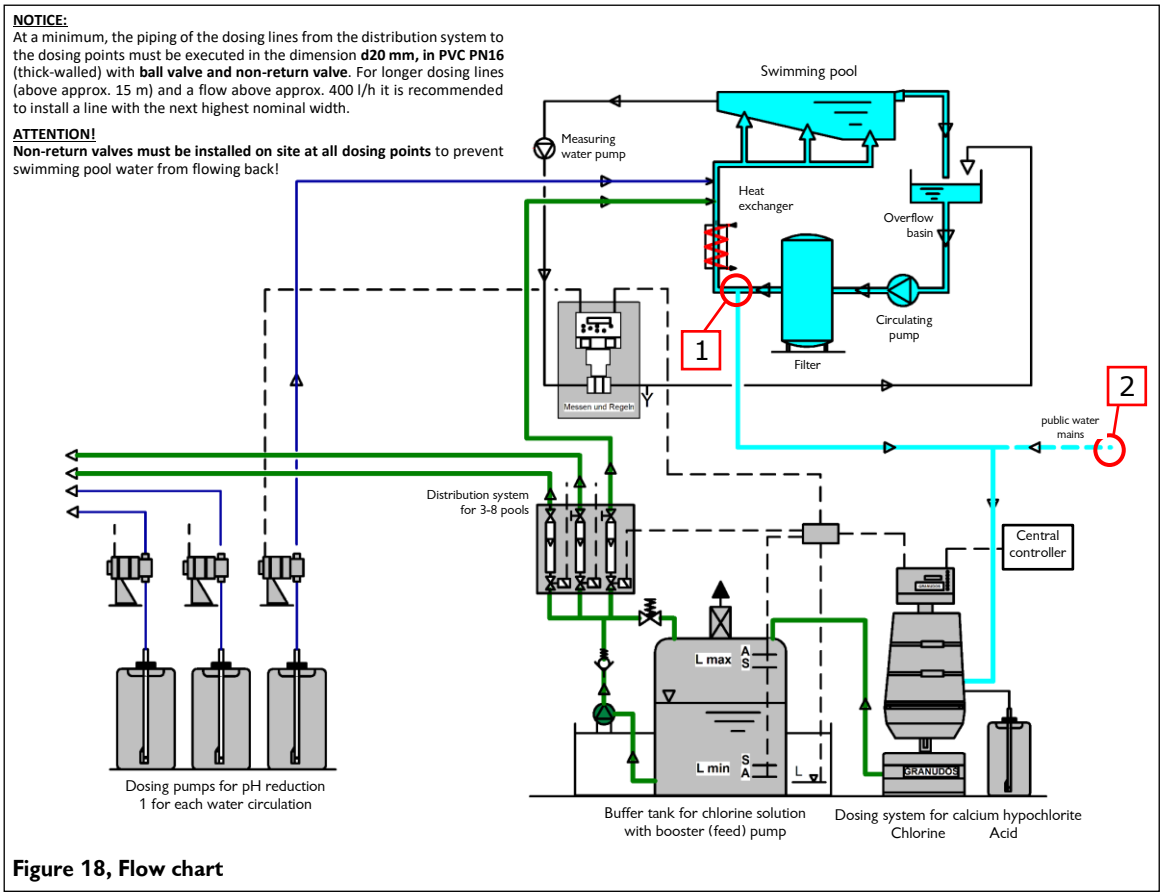

Figure 18, Flow chart

As a rule, the GRANUDOS is supplied with clean water. In exceptional cases – brine water, well water or thermal water – the system must be supplied with mains water.

Water removal point

If there are any existing connections, ensure that they are not blocked. The pipes should be kept as short as possible. The piping of the supply line in PVC must be executed in the dimension d25-3/4". Increase the nominal width for lines longer than 20 m or in case of poor pressure conditions.
Ensure that the connection sleeves for the water removal and the dosing point are completely open (metal sleeves may potentially be rusted shut).

Avoid a rising and falling of the inlet line in the piping to the GRANUDOS PLUS. This can lead to the formation of air cushions that may subsequently enter the pump during operation and cause faults.
Connect the inlet nozzle of the GRANUDOS PLUS with the water removal point.

There are 2 options for water removal:

Water supply 1 , with swimming pool water:

- Removal of the dissolving water from the clean water line downstream of the swimming pool filter, if the flow pressure at the Granudos inlet is at least 0.2 barg.

Water supply 2 , with mains water:

- Only use mains water supply if water supply 1 cannot be realised!

CAUTION!

If mains water is used, a system separation must be installed for the protection of the water network according to the locally applicable legal provisions (for Germany and the EU: DIN EN 1717: 2011-08). This prevents a backflow of the swimming pool water into the pipeline network in the event of a pressure drop in the network!

Line connection design

Line connections should always be installed laterally.

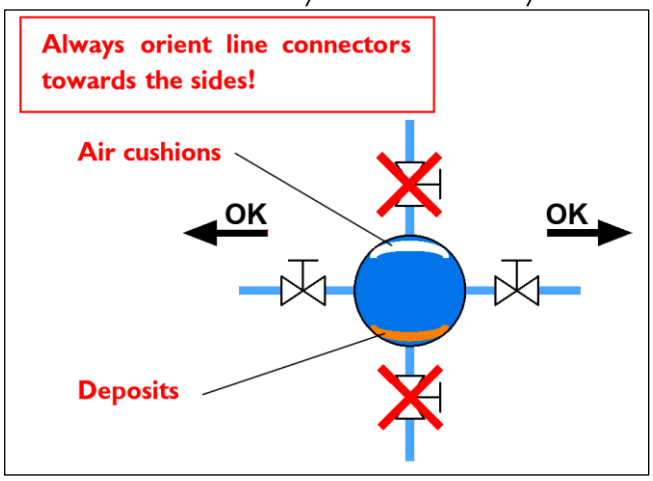

Figure 19, Line connections

Install a line from the overflow nozzle of the GRANUDOS PLUS to the gully.

4.4.2 Connecting the buffer tank (option)

ATTENTION!

Due to the chlorine solution's corrosiveness, use only thick-walled pipes in PVC PN16 in the corresponding dimensions.

4.4.3 Connecting the feed system (option)

At a minimum, the piping of the dosing lines from the distribution system to the dosing points (downstream of the filters and the heat exchangers) must be executed in the **dimension d20 mm, in PVC PN16** (thick-walled) with ball valve and non-return valve. For longer dosing lines (above approx. 15 m) and a flow above approx. 400 l/h it is recommended to install a line with the next highest nominal width, due to the potentially increased pressure loss.

ATTENTION!

Non-return valves – ideally non-return ball valves – must be installed at the dosing points. This prevents a backflow of swimming pool water into the buffer tank if the feed pump does not work and a control valve is not completely closed.

4.5 Electrical installation



DANGER DUE TO ELECTRICAL VOLTAGE!

The electrical installation must only be carried out by qualified electrical technicians! Before any electrical work is carried out, the power supply must be switched off and secured against being reactivated!



ESD SENSITIVE!

The electronic components in the devices are sensitive to electrostatic discharges. The generally accepted safety precautions for ESD-sensitive devices must be observed when handling the devices.

In particular, the following applies for work on electronic components:

- Do not pull or plug in socket connections under voltage.
- As the person handling the device, please discharge yourself electrostatically for at least 5 seconds prior to directly touching the devices, e.g., by touching a grounded part of the system or by wearing an ESD antistatic wrist strap connected to ground.

The device must be supplied with continuous voltage, i.e., the voltage supply must not be locked with the filter system. An input from CCS is available for interlocking the filling with the swimming pool's filter system. For electrical installation, see also wiring diagrams in the control unit's terminal casing or in Chapter 9.2.

4.5.1 Opening and closing the housing

The housing is equipped with an “easy lock-in closure”.

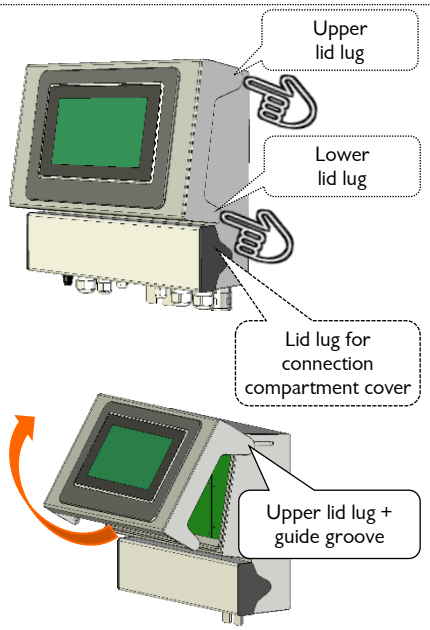

Figure 20, Control housing

Procedure

a) Open the display cover
Use your index fingers to lift the two lower lid lugs and the two upper lid lugs slightly outwards from the base housing. The display cover clips out to the front.

b) Now pull the display cover forwards.
The upper lid lugs run in guide grooves up to the front lock-in position.

The same procedure applies to the connection compartment cover (bottom).

c) Then open the display cover upwards.

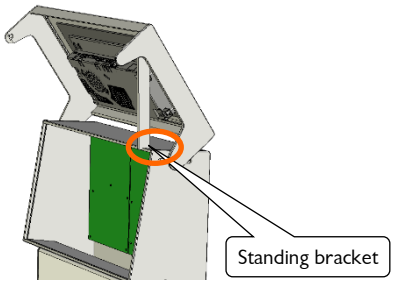

Figure 21, Control housing

d) Fold down the standing bracket, support it on the base housing and lock it in place.

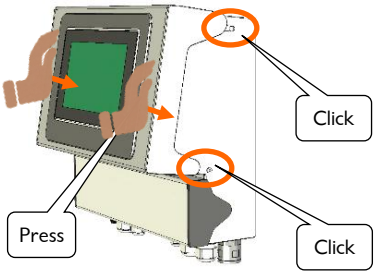

Figure 22, Control housing

e) Close the housing in reverse sequence. Release the standing bracket to the rear and fold the cover downwards.

f) Now unlock the upper lid lugs and push the lid backward onto the base housing.

g) In order to tightly reseal the housing, press gently on the four corners of the housing. The housing lid will close with a soft, audible click

h) Ensure that all lid lugs are always clipped in to prevent corrosive chlorine dust from entering!

Proceed in the same way for the connection compartment cover (bottom).

For electrical installation, see wiring diagrams in the GRANUDOS PLUS terminal casing or in *Chapter 9.2*
The control cable 10x0.5 mm² (5 m) that is already connected to the feed system, and the cable for the feed pump 3x1 mm² are connected to the control unit of the GRANUDOS PLUS - see wiring diagram

The power supply for the dosing device must always be ensured.
The external control inputs and outputs (shut-down in the event of fault, etc.) must be clamped to the clamping connectors of the baseplate in the control housing. Do not use any fixed wire conductors. *See wiring diagram in Chapter 9.2.*

Cable insertions

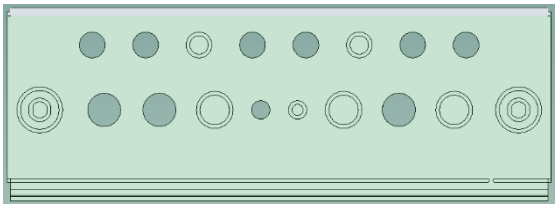

Several openings for metric screwed cable glands are available for additional insertions.
The two external screw connections with M25 are intended for the insertion of a preassembled interface cable with RJ45 plug.



ATTENTION!

Please pay attention to the spatial separation between energy and signal lines when inserting additional cables. The crossing of energy and signal lines must be avoided!

Upon completion of the work, the housing must be properly closed again!

The control cables of the measuring and control technology for the control valves 240 VAC for the chlorine dosing are clamped to the relay plate (SL2 to SL9) at the back of the mounting plate in the terminal box

Electric connection / external connection to the control centre:

To ensure that the GRANUDOS PLUS does not produce when the filter pumps are switched off or when the water supply is not guaranteed, the GRANUDOS PLUS must be interlocked with the filter system by the CCS (Central Control System).

Signals to external – potential-free outputs:

The Granudos system provides the following signals for external processing:

- Collective fault indication to the CCS (Central Control System)
- Reserve indication chlorine / acid
- Empty indication chlorine / acid

Signals from external – potential-free inputs:

The Granudos system can be activated via a CCS:

- When the filling is switched off by the CCS, the feed pump continues to run until it reaches the "Start buffer tank filling" level. → Switch off the feed pump with the control valves for the chlorine dosing.

5 Commissioning

5.1 Commissioning - Remarks

ATTENTION!

Also pay attention to this chapter for each recommissioning following an operating pause. Do not switch on the GRANUDOS VARIO Plus until the flushing tub has been filled.

The work described here may only be carried out by trained specialist personnel. Prior to commissioning, the installed systems must be checked for proper installation and leaks.
Please use the commissioning protocol from *Chapter 9.3.* for commissioning. The device is delivered with defined factory settings. You can find the setting values in the operation data sheet in *Chapter 9.4.*

ATTENTION!

During the installation of the piping and the electrical system, foreign objects may have fallen into the flushing system, which could lead to potential faults in the floating valve or the suction pipe of the flow switch. Remove foreign objects!

Remarks

- At the startup, **all faults are suppressed for 12 seconds** to ensure a constant flow in the flushing tub. Afterwards, the filling starts unless a fault is present.
- During operation/filling, a fault must be pending for **longer than 6 seconds** before the GRANUDOS PLUS is switched off.
- The No chlorine switch on the mixing cyclone must detect chlorine granulate within 8 seconds after the start of the 2nd dosing interval. The LED on the No chlorine switch is illuminated when a sufficient amount of chlorine rotates in the cyclone.
- After the Buffer tank full notification, the current dosing cycle continues to be completed. Next, acid is dosed for 20 seconds, followed by flushing with water for another 20 seconds.
- The dosing pipe's heater is always turned on.

5.2 Commissioning, setting of the operating parameters

Prior to commissioning, ensure that the inlet ball valve is open.

5.2.1 Installation of peristaltic pump, roller carrier

The acid pump is installed on the right side of the STANDING COLUMN of the GRANUDOS VARIO.

1) Remove the clipped-on, transparent pump cover. Remove the safety disc. Pull the hose bracket forwards out of the guide in the housing.

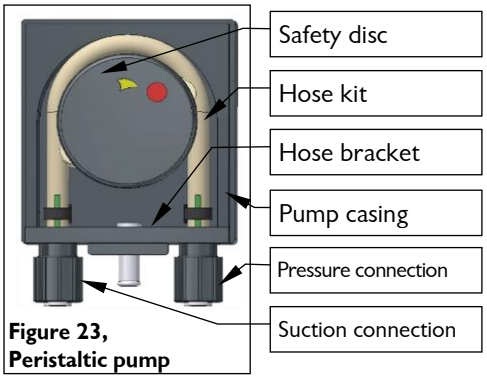

Figure 23, Peristaltic pump

2) Push the enclosed yellow roller carrier onto the axle.



Figure 24, Insert roller carrier

3) Insert the hose bracket into the casing's dovetail guide until it is flush with the front



Figure 25,
Push on hose bracket

4) Turn the roller carrier. In the process, carefully press the hose into the housing over the flat area in the roller carrier until the hose is located completely inside the housing. Continue to turn several times.

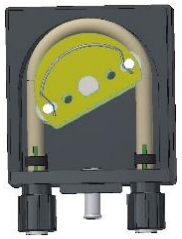

Figure 26,
Turn roller carrier

Now replace the safety disc and the transparent pump cover. The roller carrier installation is completed.

For dismantling the roller carrier and the hose bracket, proceed in the reverse sequence.

5.2.2 Preparing acid dosing for operation



PROTECTIVE CLOTHING!
Personal safety equipment must be put on before starting work with chemicals:
Protective gloves, apron, face protection, respiratory protection, boots.
Pay attention to the safety data sheets for each chemical.

Connect/change acid canister

Toxic fumes may occur when handling acids. Do not inhale any fumes.

a) Unscrew the screw cap with the suction lance from the empty acid canister, place the suction lance in the collecting basin, and immediately close the empty canister, using the original screw cap. (Not applicable during initial commissioning)
b) Lift the empty canister out of the collecting basin.
c) Place the full acid canister into the collecting basin
d) Unscrew the screw cap from the full acid canister, immediately insert the suction lance into the canister and close it securely.
e) Keep the acid canister's original screw cap until the next time the acid is replaced.

h) Press the Acid counter 

button on the display. This updates the acid level on the display. (only for CPR Touch and Touch)

5.2.3 Attaching / changing the drum



PROTECTIVE CLOTHING!
Personal safety equipment must be put on before starting work with chemicals:
Protective gloves, apron, face protection, respiratory protection, boots
Pay attention to the safety data sheets for each chemical.



ATTENTION!
At the time of the order, the GRANUDOS VARIO was designed for a certain type of chlorine drum. As a rule, the dosing head does not fit on chlorine drums by other manufacturers. If a dosing head is improperly installed on a different drum, it may detach from the drum during turning, causing the chlorine granulate to drop to the ground. The removal of the chlorine is unpleasant and time-consuming! This circumstance should be taken into account when purchasing the chlorine.
The chlorine granulate and the acid must not be mixed with each other or with other chemicals or substances!
Remove potential encrustations from the dosing hopper (23) to avoid faults in the chlorine dosing.



Tip!
When ordering the calcium hypochlorite drum, pay attention to the correct combination for the dosing head!
It is recommended to roll the new, sealed drum several times on the floor prior to attaching it to the dosing device to loosen any potential clumps in the granulate.

Check the quality when opening the chlorine drum
The following can be checked upon delivery to gain an initial impression of the quality:

The granulate must be white, free of clumps, and no strong chlorine odour must be present when opening the drum. **For more detailed notes regarding the chlorine specification, *see Chapter3.4.1, page 22***

5.2.3.1 Attaching the drum with tension band and safety belt

Stop dosing via the 

button when changing the drum.



DANGER!

When changing the drum, ensure that the dissolving unit is covered. Negligence, the dropping of large amounts of granulate or a lack of cover can cause deflagration!

Overview of GRANUDOS PLUS:

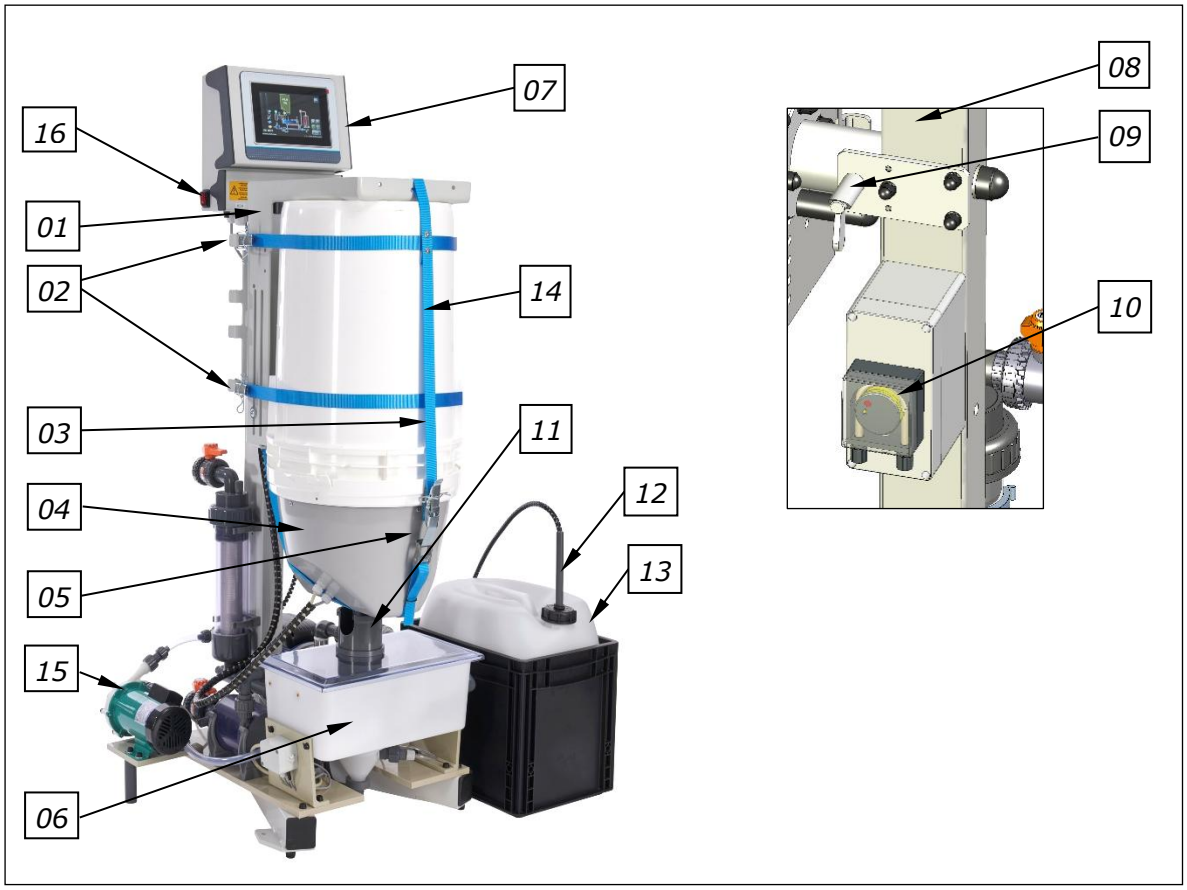

Figure 27, GRANUDOS PLUS with dust extraction

01. Drum holder
02. Tension bands
03. Safety belt
04. Dosing head
05. Clamping lever for the safety belt
06. Dissolving unit
07. Control unit
08. Identification plate (on the right side of the upright pipe)
09. Spring bolt for the turning device
10. Acid pump
11. Dust protection, protective pipe
12. Suction lance for acid
13. Acid canister with collecting basin
14. Chlorine drum
15. Dust extraction
16. Main switch

Procedure for drum change:

a) Push the dust protection pipe (*11*) downward.

b) Release the spring bolt (*09*) of the turning device and rotate the turning device with the empty drum clockwise from the dosing position upward; while doing so, keep the dosing pipe covered with a finger to prevent any granulate from escaping. Relock the turning device. (This point does not apply during the initial commissioning.)

c) Loosen the safety belt (*03*) and the tension bands (*02*). Remove the empty drum from the turning device. Unscrew the dosing head with a counter-clockwise turn and place it next to the dosing device. (This point does not apply during the initial commissioning.)
d) Align the drum on the floor so that the recessed grips point sideways.
e) Unscrew the lid from the new drum and remove the measuring cup, if present.
f) Place the dosing head on the drum and screw it tight until the control cable is located on the right side.



ATTENTION!
Ensure that the dosing head correctly engages with the drum's thread without jamming and that a proper connection exists after it has been screwed in.

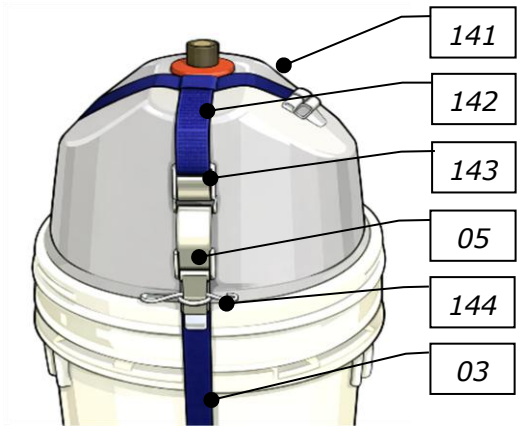

Figure 28, Dosing head

03. *Safety* belt (general)
05. *Clamping lever for the* safety belt
141. Carrier belt
142. Adjusting belt
143. Clamp lock
144. Safety pin

g) Place the new drum on the turning device so that it is leaning against the posterior tracks and the lower spacers and the holding rod engages with the drum's cross ribs.
h) Next, pull the tension bands around the drum and close the tension lever. The tension lever must be tightly closed; however, do not use excessive force when turning the tension lever. The length of the tension band must be adjusted correspondingly at the screw ends.
i) Insert the safety pins in the tension levers!
j) Pull the safety belt's carrier belt (*141*) over the heating nozzle from behind so that the bolt's clamp lock (*143*) is located on the front of the hopper. Insert the safety belt's clamping lever (*05*) in the clamp lock, pull it tight and secure with the safety pin. If the safety belt is not tight, adjust the length of the adjusting belt (*142*) accordingly. Insert the safety pin (*144*)!



ATTENTION!
Ensure that all safety pins have been inserted!

k) Unlock the drum holder by turning the turning device's spring bolt (*09*) upward. Cover the dosing pipe with a finger and slowly turn the drum counter-clockwise into the dosing position. Lock the drum holder by turning the tension bolt downward. Ensure that the control cable does not get entangled.
l) Orient the dust protection pipe in the flushing tub lid so that any potential air current does not blow away the fine chlorine dust. (Distance of the protection pipe's upper edge from the dosing head approx. 1-2 cm). Minimise air draft - close doors!
m) Press the Chlorine counter  button on the display. This updates the chlorine level on the display.

5.2.3.2 Attaching with drum holder FH3 (option)

a) Push the dust protection pipe (*11*) downward.

b) Loosen the spring bolt *(09)* of the drum holder. Rotate the turning device with the empty drum clockwise upward; while doing so, keep the dosing pipe covered with a finger to prevent any granulate from escaping. Relock the turning device. (This paragraph does not apply during the initial commissioning.)

c) Loosen the two vertical retaining straps (153) on the clamping lever (154) and unhook them.

d) Open and unhook the two horizontal tension bands *(02)* on the right-hand side (this paragraph does not apply during the initial commissioning).

e) To open the two drum retaining arms (152), open the clamping lever (151) of the retaining ring and turn the two drum retaining arms outwards.

f) Remove the empty chlorine drum *(14)* from the turning device. Unscrew the dosing hopper *(23)* and place it sideways on the floor (this paragraph does not apply during the initial commissioning).

g) Unscrew the lid from the new drum and **remove the measuring cup**, if present.

h) Place and screw the dosing hopper on the drum so that the drum's recessed grips are oriented laterally and the control cable points to the right.

i) Lift the full drum with the dosing hopper onto the turning device.

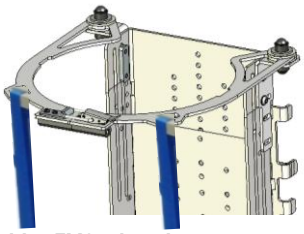

Drum holder FH3, closed

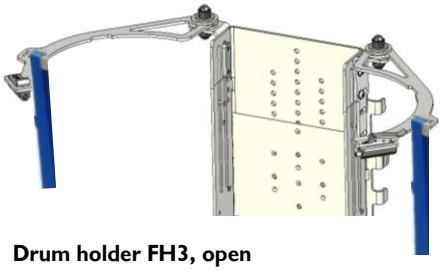

Drum holder FH3, open



Drum holder FH3 with drum, open

ATTENTION!

Watch the dosing hopper's control cable to prevent the protective pipe from being bent!

j) Next, pull the tension bands *(02)* around the drum and close the tension levers. The tension levers must be tightly closed; however, do not use excessive force when turning the tension lever. The length of the tension band must be adjusted correspondingly at the screw ends.

k) Push the two drum holding arms (152) together and lock them with the clamping lever (151). Hook in the vertical retaining straps (153), close the clamping levers (154) and tighten the straps. Secure all 3 clamping levers with safety pins (155).

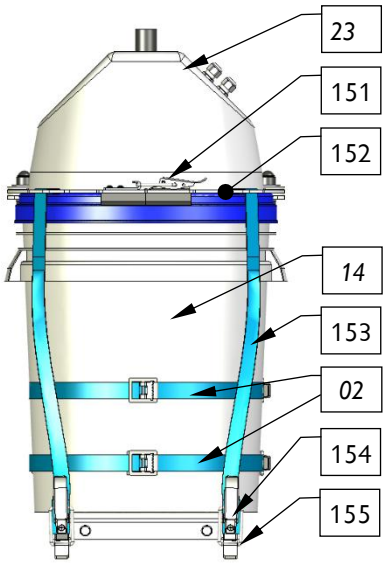

Figure 29, Drum holder type FH 3

ATTENTION!

Ensure that all safety pins have been inserted!

l) Loosen the spring bolt *(09)* of the drum holder. Rotate the turning device with the drum counter-clockwise downward into the dosing position. Once again, cover the dosing pipe with a finger. Lock the turning device with the spring bolt.

m) Orient the dust protection pipe *(11)* so that any potential air current does not blow away the fine chlorine dust. (Distance of the protection pipe's upper edge from the dosing hopper approx. 1-2cm).

n) Press the Chlorine counter  button on the display. This updates the chlorine level on the display.

5.2.4 Venting of the booster pump and the piping to the GRANUDOS

The pump and the piping must be carefully vented prior to each commissioning of the GRANUDOS PLUS to prevent the booster pump from running dry. Pay attention to the following in this regard:

a) Check manually if the pump shaft can be turned with ease. To do so, use a screwdriver to turn the fan propeller in the back. If the shaft does not turn smoothly, the mechanical seal is clotted. Loosen the shaft by abruptly turning it back and forth. If this does not solve the problem, the pump must be deinstalled and disassembled to loosen the mechanical seal.



ATTENTION!

If the pump is switched on with a blocked mechanical seal, the pump's failure is inevitable.

b) During commissioning, open the ball valves at the water removal point and the dosing point; then open the inlet valve at the dirt filter d75 and wait until the flushing tub is half full. This ensures that water has flowed through the pump and the pump has been vented. Then open the shut-off valve upstream of the cyclone. Only then switch on the GRANUDOS at the main switch *(16)* and observe the dirt filter d75. If the water level in the filter drops significantly when the pump is switched on, switch off the GRANUDOS at the main switch and open the venting screw at the top of the filter (option: filter vent 1/4 "with ball valve and hose) and allow water to run into the filter, then switch the device back on. If necessary, repeat the process several times until the filter remains full; a few air bubbles in the upper filter area are inconsequential.



ATTENTION!

If the pump draws air while in operation or during unmonitored activation, the pump's mechanical seal will run dry, overheat and start to leak. This can be the case with an installation above the swimming pool level, when draining the supply line or when turning off the filter system.

5.2.5 Initial filling of the feed system's buffer tank

Prerequisites:

The GRANUDOS PLUS system is completely connected and the water supply has been ensured. The chlorine drum has been attached and the suction set for the acid is connected to the canister.

The startup programme:

a) Turn on the device at the main switch (unless this has already been done). The startup programme is automatically activated by the Minimum level alarm switch.
b) The GRANUDOS PLUS now fills the buffer tank without chemicals for 10 minutes. Fault indications from the feed system will not be considered during this process.
c) During this time, the **water flow in the dissolving unit** and the **water level in the flushing tub** must be adjusted. *(See Chapters 5.2.6 and 5.2.7)*
d) After 10 minutes, the GRANUDOS PLUS switches off automatically. The water level should now be above the feed pump's pressure socket. The display shows the following notification: Has the desired level been reached? → Yes or No.
e) If the required level has not yet been reached, confirm with No; the buffer tank will be filled for an additional 10 minutes, until the device again queries the level or the Level full switch automatically stops the filling.
f) When confirming with Yes, the following prompt is shown: **Vent the feed pump** (see *Chapter, 5.2.9, Venting the feed* pump). For designs without feed system, confirm the message with OK.
g) Once the query is confirmed, the operating programme starts.
Continue with *Chapter, 5.2.11, Calculating the dosing lines' flow* capacity

This point does not apply when only the buffer tank was ordered without feed system.

Hinweis

NOTICE!

During the initial filling of the buffer tank, the settings must be adjusted according to Chapters *5.2.6* to *5.2.8*.

5.2.6 Setting the water flow in the dissolving unit

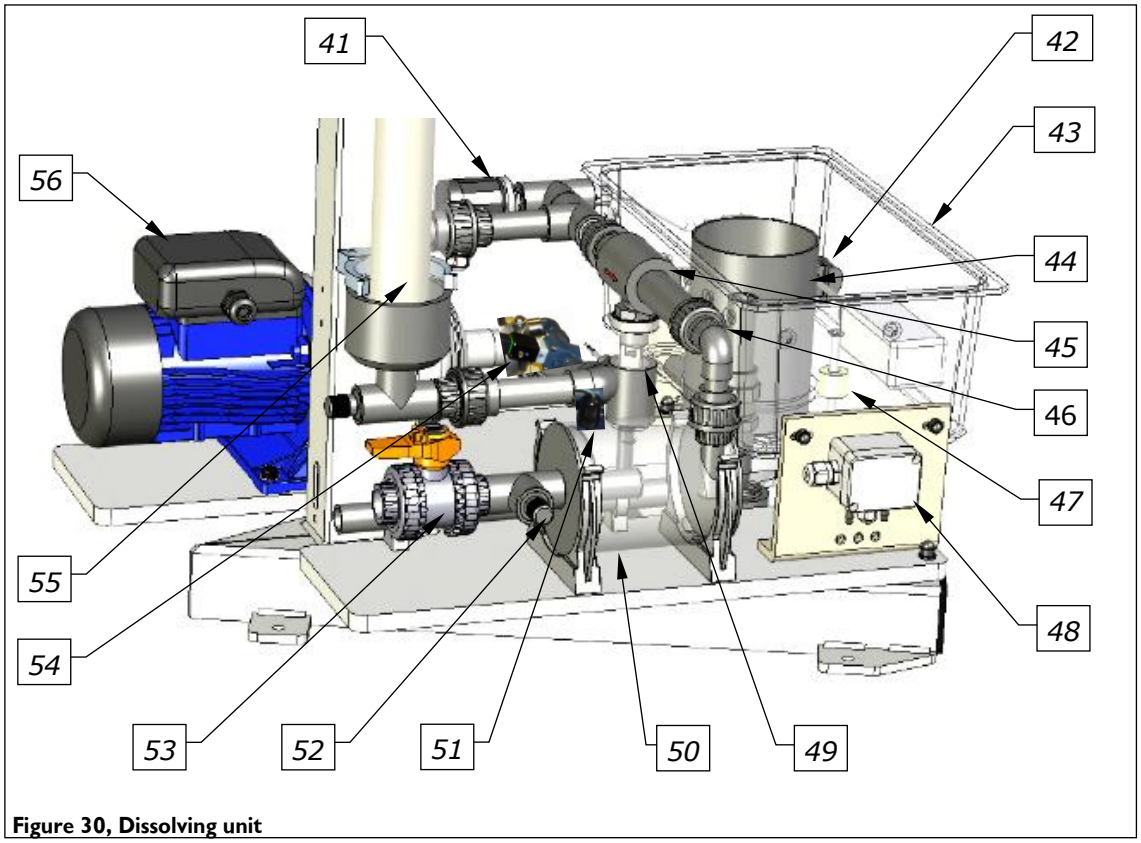

Figure 30, Dissolving unit

41. Pressure switch
42. Float control valve at flushing tub inlet with float
43. Flushing tub
44. Flushing pipe
45. Injector
46. Pipe union with hole washer
47. Level switch min./max. Flushing tub
48. Connection socket for the switches
49. Flow switch for flushing tub
50. Dissolving cyclone
51. No chlorine switch / sensor on the cyclone
52. Connection for manometer
53. Outflow ball valve
54. Control valve for the dissolving water
55. Dirt filter d75 mm
56. Booster pump (various designs)

The hole washer in the pipe union (*46*) behind the injector (*45*) adjusts the injector's suction performance to the pressure conditions:
If the water level in the flushing tub (*43*) drops during commissioning, the injector's suction performance is too high and it is necessary to insert a washer with a smaller drill hole in the pipe union (*46*).
If the water level rises, or if the flow switch's switch body (*49*) is not clearly pushed upward, the injector's suction performance is too low and a washer with a larger drill hole is required, or the washer must be removed entirely.
A washer with 6 mm is installed ex works; washers with 5.5 mm and 7 mm are available in the enclosed spare parts bag.

5.2.7 Setting the water level in the flushing tub

The water level in the flushing tub can be changed by screwing the float at the *float control valve (42)* in or out. A higher level is achieved by screwing the float out, a lower level by screwing the float in. One revolution corresponds to approx. 1 cm. Adjust the float in the flushing tub so that the water level corresponds approximately to the centre of the flushing tub.

5.2.8 Setting the pressure switch

The pressure switch (*41*) records the booster pump's (*56*) effective pressure. This pressure monitoring ensures that the GRANUDOS dosing device switches off if the switching pressure falls below the set value, e.g., when air is drawn in or in the event of a pressure drop in the water supply. This ensures that:

- The dosing is turned off if the booster pump does not transport enough water.
- The booster pump is not exposed to the risk of cavitation.

To set the switching point, the dosing device must be in operation (= buffer tank filling).

a) Remove the cover from the pressure switch.
b) Turn the adjustment knob 0.25 bar to the right and wait for 6 seconds.
c) If the dosing device continues to run, repeat the process until the dosing device stops and the "Minimum pressure alarm" fault indication appears. The GRANUDOS dosing device stops.
d) Now turn the adjustment knob 0.25 bar to the left and confirm the alarm message.
e) The dosing device will start up again.
f) The dosing device will now throw a fault at a pressure drop of 0.25 bar.

A switching point of 1.5 barg is preset ex works.

5.2.9 Venting the feed pump



ATTENTION!

The feed pump must be vented prior to being switched on! Otherwise, there is the risk of damage to the pump due to overheating.

During the buffer tank's initial filling (without chemical dosing), the following prompt appears after confirming the filling when a sufficient level has been reached: **Vent the feed pump.** To do this, open the ball valve *(pos. 80, page 16)* in the **vent line to the container**. The pump is started by pressing the OK button. The pump is vented after approx. 15 seconds, once the water flows back into the container, and the ball valve is closed again.

5.2.10 Setting the pump pressure at the feed pump/pressure retention valve (option)

a) Open all shut-off valves and control valves (manual operation) on the dosing lines.
b) Reduce the pump output to minimum (only for the design with frequency converter).
c) Adjust the calculated flow rates *(see Chapter 5.2.11)* at the angle seat valve *(pos. 91, p. 17)* of the feed system.
d) No water should now flow out of the return line *(Figure 32, Return line)* to the buffer tank. If water flows out, restrict the pressure-retaining valve by **turning the adjusting screw to the right** until no more water flows out.
e) Close all control valves (manual operation).
f) Set the pressure retention valve so that a finger-thick jet of water flows out of the return line. This is necessary to cool the feed pump.
g) Check the flow rates. If the flow rates differ, repeat the procedure, starting with step c).
h) If the required **flow rates are not achieved**, increase the pressure in the dosing lines. The pressure is increased by **turning the adjusting screw on the pressure retention valve to the right** and reduced by turning it to the left (see manometer).
   - **Design with frequency inverter:**
     For the **feed pump design with a frequency converter**, set the pump performance at the potentiometer on the frequency converter. The settings of the **frequency inverter and the pressure retention valve are interdependent of each other**. The higher the pump pressure is set, the farther the pressure retention valve must be throttled back. The pump has to generate an unnecessary amount of power, which reduces the service life. This means that **the pump output should only be set as high as is really necessary, but at least at 1.0 barg!**
i) Increase the pressure until the calculated nominal flow is reached in all opened dosing lines!
j) The total flow through the dosing lines must always be lower than the maximum filling capacity of the GRANUDOS PLUS! This means that the GRANUDOS PLUS must continue to slowly fill the tank at full dosing performance.

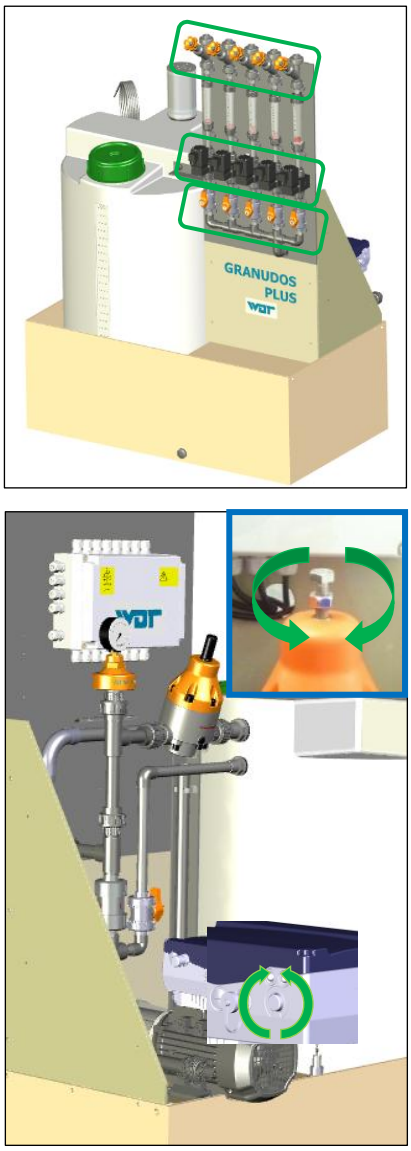

Figure 31, Distribution system, pressure retention valve, frequency converter

k) Check the function of the pressure retention valve. Close all ball valves on the dosing lines. When all valves are closed, a finger-thick water jet must be expelled from the return line in the tank; this cools the pump.

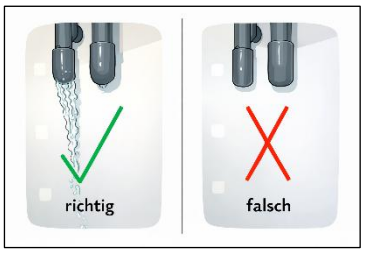

Figure 32, Return line

Achtung!

ATTENTION!
An incorrectly set pressure retention valve can destroy the pump!

Tipp

Tip!
With the set dosing performance and open control valves, the buffer tank must continue to slowly fill up. The Granudos PLUS has a filling capacity of up to 1200 l/h.

5.2.11 Calculating the dosing lines' flow capacity

The maximum chlorine dosing performance is indicated on the identification plate. This is based on a calcium hypochlorite concentration of 70% and granulate with a good dosing capability.

The flow capacity to be set on the dosing line or the required dosing performance of a dosing pump for the respective pool is determined based on the required chlorine dosing performance and the chlorine solution's concentration. The chlorine solution's concentration is determined at an assumed flow of approx. 1000 l/h in the GRANUDOS PLUS dosing device.

Achtung!

ATTENTION!

The sum of the flow capacities of all pools calculated in this manner may be up to 1000 l/h; if higher values are calculated, the chlorine concentration must be increased.

The calculated and set conveying capacities for the individual dosing lines are entered in the operation data sheet in Chapter *9.4*.

5.2.12 Determining the dosing performance for the granulate dosing

The effective dosing performance for the chlorine granulate must be determined in order to **calculate** chemical consumption and thereby also **the reserve indication** for the chlorine granulate.
Provide a shallow collecting basin holding approx. 250 ml (e.g., a shallow dish) and scales for determining the dosing performance.

Hinweis

NOTICE!

Place a shallow collecting basin under the dosing pipe and follow the menu prompts. Weigh the dosing samples.

Determining the dosing performance:
Press **Menu → Settings → Determining dosing performance** on the start display. Then follow the menu prompts.

Achtung!

Check the water level in the buffer tank prior to starting the determination of the dosing performance. The water level should be at the low fill level, since in the course of determining the dosing performance, filling with water only will occur for approx. 10 minutes, and the stopping point must not be reached prior to this.

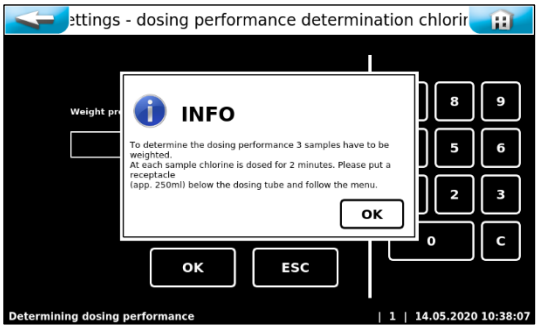

Place a collecting basin, e.g., a shallow dish, under the dosing pipe.

Figure 33, Determining dosing performance for chlorine 1

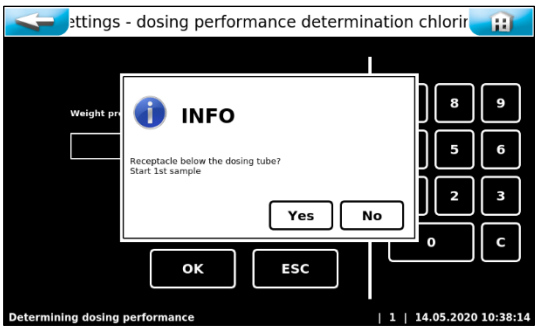

Figure 34, Determining dosing performance chlorine 2

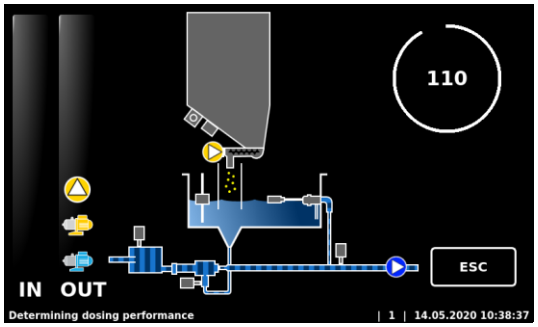

Chlorine granulate is transported into the collecting basin for 2 minutes.

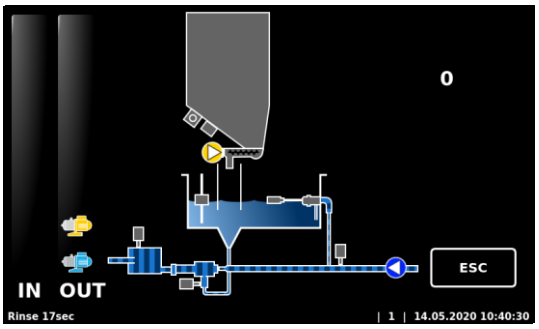

This is followed by 20 seconds of flushing.

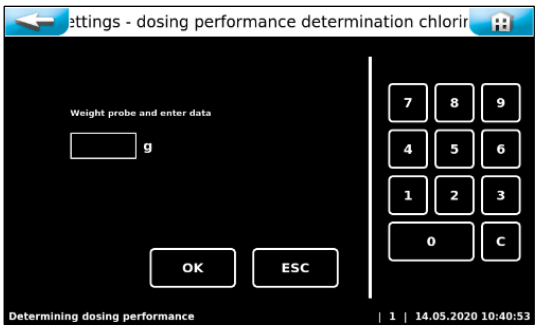

Weigh the dosing volume in the collecting basin with a letter scale.
Enter the determined weight in grammes and confirm with OK.
This process is repeated 3 times in total. The programme then calculates the mean value of the 3 samples, thereby determining the dosing device's chlorine consumption.
Following the final weight entry, the device shows the actual dosing performance in continuous operation.
Confirm this value with OK.
Switch to the start display via the Back button (white arrow).

Figure 35, Determining dosing performance for chlorine 3

Tipp

Tip!

If the granulate quality changes, e.g., if a different supplier is used, the dosing performance determination must be performed again to ensure that the reserve indication is accurate.

5.2.13 Venting the dust extraction pump (option)

CAUTION!

Water may splash out when venting the pump!

Personal safety equipment must be put on before starting work with chemicals: Protective gloves, apron, face protection, foot protection.

Description
In order for the dust extraction to function properly, the dust extraction's circulation pump must be vented.
Procedure

a) **Switch off** the device at the **main switch**.
b) Fill the flushing tub with water up to the mid-fill level (if this has not been done yet). This fills the dust extraction pump with water, preventing a dry run!
c) Prepare the *Dust* extraction *(15)* for venting; to do so, slightly loosen a pipe union on the pressure side
d) **Switch on** the device at the **main switch**
INFO! Immediately after switching on, the flushing system initiates the flushing programme (dust extraction pump runs, solenoid valve opens)
e) Vent the dust extraction pump and retighten the hose connection

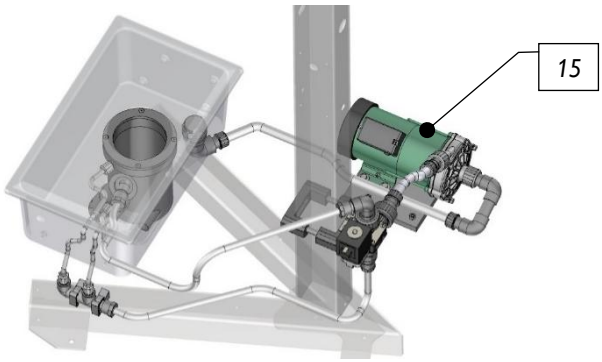

Figure 36, Dust extraction

Tipp

Tip!
To test the flushing (without changing parameters), switch the GRANUDOS OFF and ON again at the main switch. The flushing then runs according to the set parameters (ex works: 10 s flushing, 1 h pause)

GRANUDOS standby operation; in this operation mode, the flushing also works according to the set parameters

5.2.14 Setting the dosing performance for chlorine and acid on the GRANUDOS

Main menu → Settings → Buffer tank / feed system

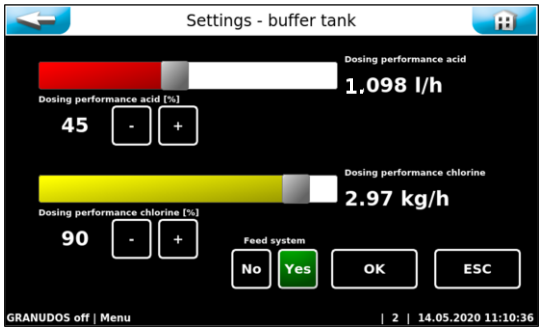

This menu makes it possible to set the **dosing performances for chlorine and acid** for filling the buffer tank and to **activate the feed system's function**.

Set a corresponding dosing performance for chlorine and acid. However, this must be **at least 50% for the chlorine**, due to the sensitivity of the "No chlorine switch" on the dissolving cyclone. A low dosing performance leads to a low chlorine concentration and thus a higher flow capacity at the dosing lines, *see Chapter 5.2.11*.

Figure 37, Dosing performance chlorine/acid

The dosing performance for the acid must be set so that the chlorine solution is pH-neutral (pH 7.0 +/- 0.2). The dosing performance required for this must be determined in accordance with the chlorine granulate's

concentration, the hardness of the dissolving water / swimming pool water, the water's pH value and the acid concentration.

When using 37% sulphuric acid, the acid dosing is initially set to **50% of the chlorine dosing performance** (e.g., 30% acid with 60% chlorine).

- Wait approximately 2-5 minutes after the initial filling to allow the backflow to mix with acid and water.
- Measure and evaluate the chlorine solution's pH value: pH to high: more acid; pH too low: less acid.
- During the next filling, the new settings will be applied for the dosing. Then measure again and correct the acid dosing until the pH value has reached 7.00 +/- 0.2.

The filling is regulated automatically via the level switches in the buffer tank.

Feed system No/Yes:
Permanently activate or deactivate the "Feed system" function.
Only possible in the "Technician 1" user level!

At the same time, this function is used to switch the flow diagram display between feed system (yes) and buffer tank (no)

Explanation regarding the dosing process
Chlorine and acid are dosed at intervals with pauses between the dosing cycles.
The dosing performance is determined by the dosing cycle (time between the dosing intervals) and the dosing times (running time of the dosing motors for chlorine and acid).

A **dosing cycle always lasts for 30 seconds**. The dosing time (=dosing performance) is set within these cycles:
a) Chlorine dosing: 1-15 sec.
b) Pause: 3.5 sec.
c) Acid dosing: 1-8 sec.
d) Pause until end of cycle

There is always a mandatory pause of at least 3.5 seconds between the chlorine and acid dosing. The pause time changes automatically, depending on the length of the dosing time.

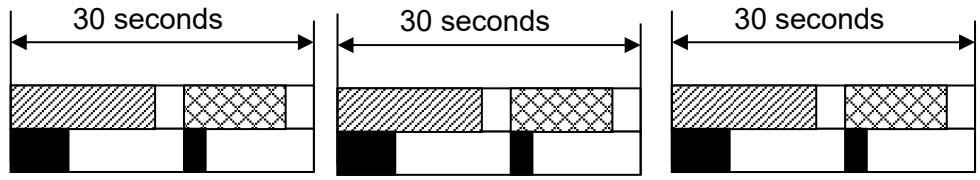

maximum dosing time chlorine
maximum dosing time acid
set dosing time chlorine or acid
Pause time

As a rule, 37% sulphuric acid is used as a pH reducer. With a high dosing performance and very hard water, it may be advantageous to dose hydrochloric acid.



ATTENTION!
The use of sulphuric acid is generally possible up to a concentration of 50%. For higher concentrations or when using other acids, e.g., hydrochloric acid, the changed dosing performance and/or increased corrosiveness must be watched for! We recommend consultation with WDT!



ATTENTION!
The effective dosing performance for the chlorine granulate also depends on the chemical's quality. An excessive proportion of fine particles or excessively coarse grains results in a reduction of the nominal performance.
For the exact determination of the nominal performance, see *Chapter 5.2.12*.

Tipp

Tip!

A pH-neutral chlorine solution is clear and only has a light chlorine odour. A cloudy solution indicates a pH value that is too high. A clear chlorine solution with a strong odour indicates a pH value that is too low.

5.2.15 pH monitoring (option)

During commissioning, the pH electrode must be calibrated. The pH monitoring is preset ex works.
During operation, the **calibration must be repeated every 3 months** and entered in the maintenance protocol.

Vorsicht!

CAUTION!

These ex works settings must not be changed:
lower limit value pH 6.5
lower limit value pH 7.5
Delay time 5 min

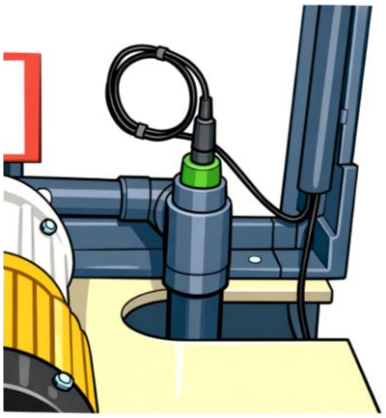

Figure 38, pH electrode

The calibration may only be carried out when the GRANUDOS is **not** in the "Fill buffer tank" operating status!

Switch off the GRANUDOS with the Stop button . The feed pump stops. Close the shut-off ball valves of the dosing lines and the suction lines to the feed pump.

- Unscrew the connector plug from the electrode.
- Unscrew the pH electrode.

For internal pH measurement
see *Chapter 6.3.5,* ***Main*** **menu** → Calibration (Option for design with internal **pH monitoring)**

- Subsequently reinstall the electrode.

For external pH measurement

- See "Setting the pH monitoring" in *Chapter 0 Appendices*
- Subsequently reinstall the electrode.

6 Operation / Use

Pay attention to the nationally applicable accident prevention regulations (Germany: BGR/GUV-R 108 Operation of swimming pools).

6.1 Normal filling process during operation

Once all the preparations for commissioning have been completed, the GRANUDOS dosing system can be started. The device is already switched on (main switch).

Operating programme:

Press the Start button  to start the programme.
After the start, there will be 12 seconds of flushing with water only, followed by a continuous dosing of chlorine and acid, according on the setting. The GRANUDOS dosing device is only switched on and off via the **"Start filling"** and level **"Stop filling"** level switches in the buffer tank.
After switching off the dosing via the **level "Stop filling" = Container full**, the dissolving unit will be flushed for an additional 40 seconds to ensure that the GRANUDOS' dissolving unit remains clean. During the first 20 seconds, this occurs with acid dosing.

6.2 The control unit - Version GRANUDOS PLUS-V80 Touch

The control unit of the GRANUDOS PLUS-V80 Touch is simple and easy to operate, using the symbols and the menu prompts on the 7" touch screen. The justage menus come with additional text-based instructions.

6.2.1 Operation display – Operating status – Operation messages

The operating states and faults are displayed directly on the start display: see *below Figure 39, Automatic operation* - start screen.
In automatic operation, the current operating status, the fill levels and active inputs and outputs are displayed (IN – OUT). The inputs and outputs can be operation messages or fault indications.

Operating notes:
The current operating status is displayed in the status line (*5*) at the bottom left. The following operating states are available:

- Booster pump startup routine
- Standby
- Buffer tank filling
- Calibration
- Rinsing programme
- GRANUDOS OFF
- GRANUDOS ON
- Startup buffer tank filling

Desired settings, calibrations and tests can be conducted by lightly touching the corresponding symbol or the numeric value.

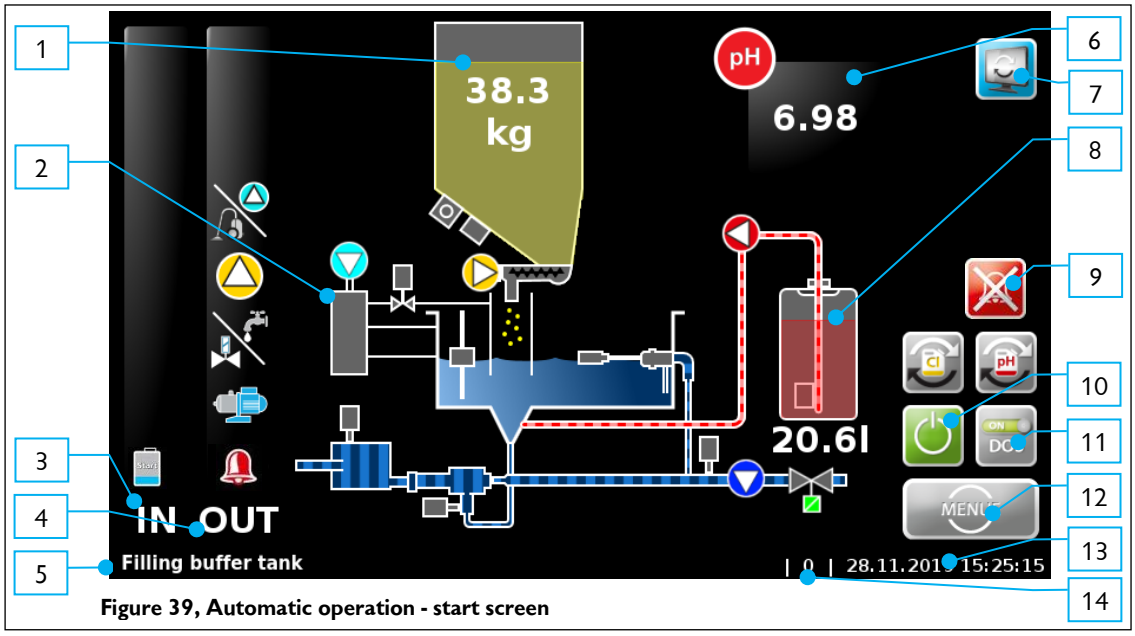

Figure 39, Automatic operation - start screen

Key:

1. Chlorine granulate fill level
2. Dust extraction (option)
3. IN list
4. OUT list
5. Status line
6. Measuring value pH (option)
7. Toggle between start display and buffer tank display
8. Acid fill level
9. Deactivate alarm
10. Start / stop dosing device with feed pump
11. Manually activate / deactivate dosing
12. Menu button
13. Date / time bar
14. User level (0=guest, 1=end user, 2=technician 1)

The **IN list** shows the input signals.
The **OUT list** shows the active output signals.

The function buttons on the start display


Switch to buffer tank/feed system view



Reset chlorine counter (press when changing containers)



Reset acid counter (press when changing containers)


Switch dosing unit on/off



Skip startup delay, after start via CCS



Switch chlorine and acid dosing on/off, e.g., for service tasks
The chemical dosing is switched off for flushing the dosing system.


Deactivate alarm relay



Call up the main menu
The system is stopped completely when switching to the main menu.

IN list



red = pH level (container for pH regulation empty)
yellow = disinfection level (container for chlorine granulate empty)



The system is deactivated via the central control cabinet.
No dosing occurs, no alarm message given.



The pressure at the GRANUDOS booster pump is too low. The booster pump is stopped



The level in the GRANUDOS flushing tub is too low. The booster pump is stopped



The level in the GRANUDOS flushing tub is too high. The system is stopped



The flow in the GRANUDOS is too low. The system is stopped.



A fuse has been tripped. See log files to identify the fuse.

IN list (feed system/buffer tank)



Fault indication for the pH value in the buffer tank



Buffer tank filling is started,



The filling of the buffer tank with chlorine solution is stopped.



The buffer tank level has dropped too low. The system is stopped



The optical sensor on the cyclone did not detect any chlorine while the buffer tank was being filled. The filling was stopped - alarm.



The buffer tank level is too high.
Chlorine dosing, acid dosing and the booster pump are stopped. The feed system switches to the **emergency operation programme (display in the status line)** and the feed pump is forced to start.



Protection tub alarm (leakage)
Chlorine dosing, acid dosing and the booster pump are stopped. The feed system switches to the **emergency operation programme (display in the status line)** and the feed pump is forced to start**.**



Notice regarding emergency operation
With **Maximum level alarm** and/or **collecting tub leakage**, the feed pump is forced to start. The feed pump runs as long as one or both of the alarms are pending; this is intended to prevent a backflow of swimming pool water via the dosing lines **(indication in the status line: Emergency operation)**.

OUT list



red = acid dosing output active
yellow = chlorine dosing output active



The alarm relay is active.



Chemical reserve – Indication for both chemicals
Advance notice for container exchange, check chemicals levels and prepare chemicals



The booster pump is active



Feed pump is active



The feed pump's motor protection was triggered



The knocker is active. This symbol is only displayed briefly.



Control valve for the dissolving water *(54)*



Dust extraction active



Dust extraction flushing This symbol is only **displayed very briefly**.

6.2.2 Start –Booster pump delay and dosing delay

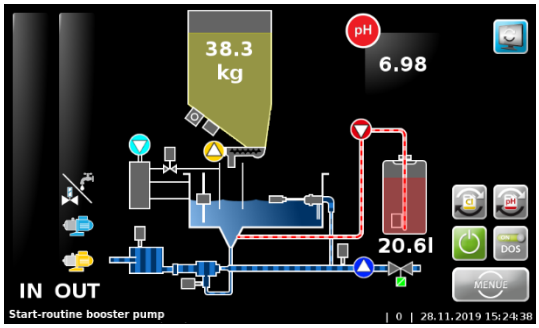

If the device is restarted, the **"Booster pump startup routine"** is running: The booster pump runs for 12 seconds without dosing. Software alarms are suppressed during this time.

The device then switches to the **"Buffer tank filling" or "Standby"** operating mode.

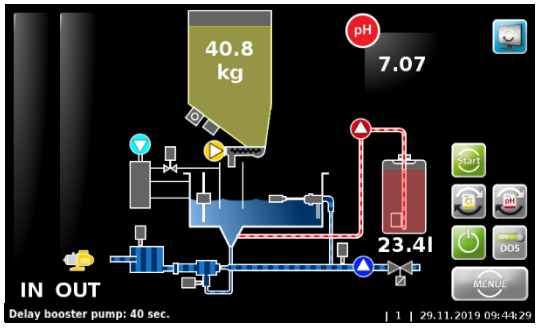

If **"Delay booster pump"** is activated, the delay time displayed in the status line expires prior to the start of the booster pump. Subsequently, the **Booster pump startup routine** starts.
(This is used to vent the supply line.)

Use the  button (top right) to switch to the Buffer tank/feed system display.

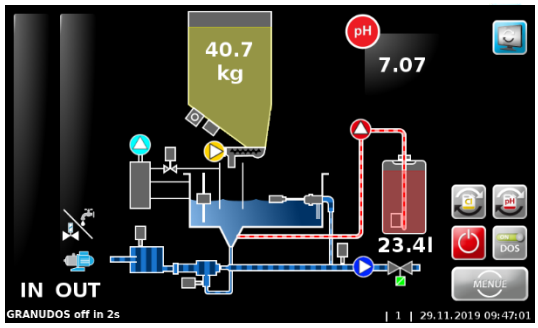

If the dosing device is switched off externally, dosing stops and the booster pump continues to run for 20 seconds to prevent any chlorine from remaining in the GRANUDOS. Afterwards, the GRANUDOS switches off.

6.2.3 Operating mode - Automatic operation

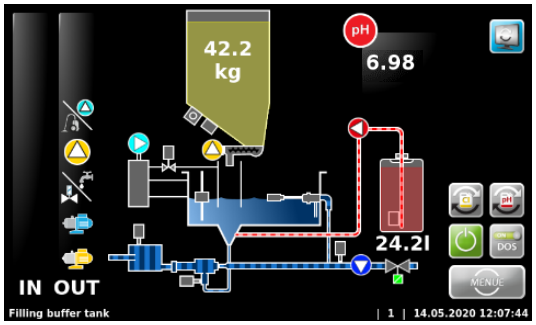

In normal operation, the device is in the **"Buffer tank filling"** operating mode. The device doses chlorine and acid in the set cycle.

The **OUT list** shows the currently active outputs as an example:

- Dust extraction
- Chlorine dosing
- Dissolving water control valve
- Booster pump
- Feed pump

There is no fault.

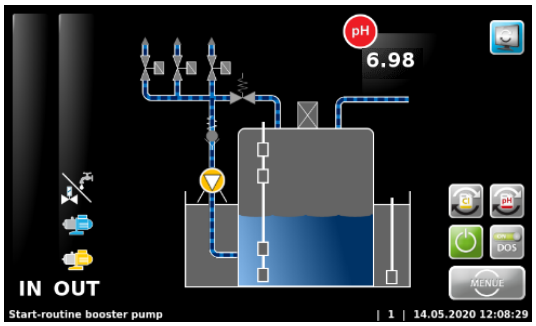

The illustration shows the Booster pump startup routine
OUT list: Booster pump and dissolving water control valve active

6.2.4 Alarms

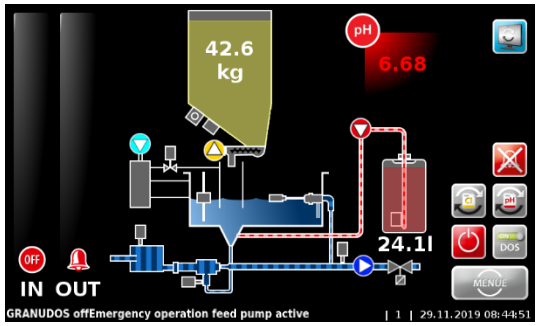

If an alarm occurs, this is signalled by the symbol in the OUT list. The alarm relay is activated.
In the event of a fault, the corresponding symbol appears in the **IN list** - here, pH value too low.
Alarms or faults must be pending for 6 seconds before the signal is processed.

With the button, the alarm relay can be temporarily deactivated without fixing the fault.

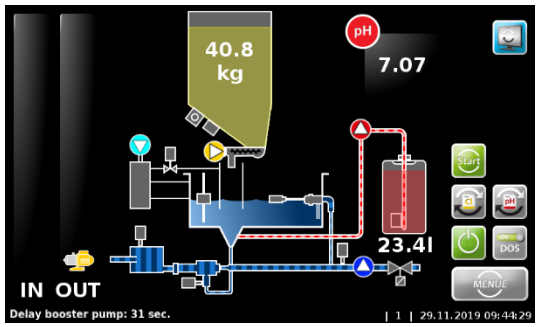

The GRANUDOS now starts with the startup routine.

If the fault recurs again, or if the fault is not fixed, the alarm relay will be reactivated.

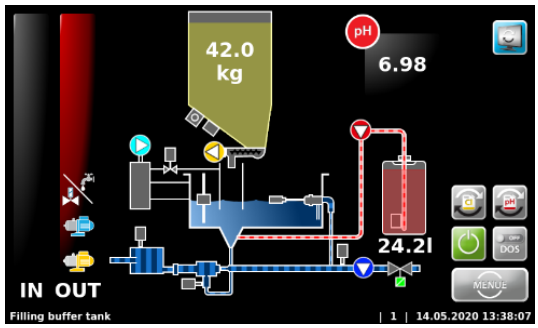

The illustration here indicates: everything OK

6.3 Main menu

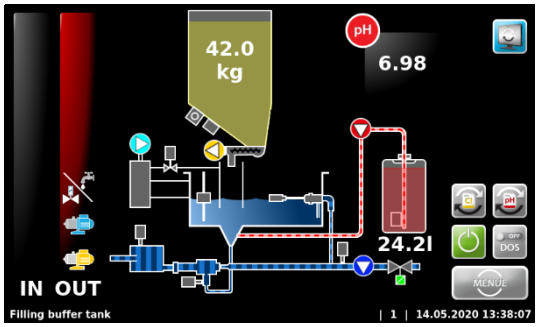

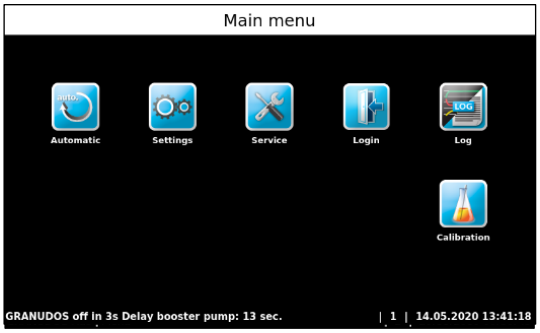

Automatic
Navigates to the start display and into automatic operation; (= operating modes) switches automatically to user level 0 or 1

Settings
For adapting parameters and system settings

Service
Input and output test, info

Login
For password assignment; no password is assigned in the delivery state.

Log
For query of events and data logging

Justage
Justage of the pH electrode

6.3.1 Main menu → Login / Password

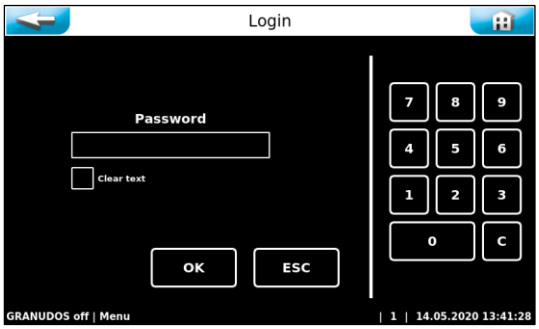

It is possible to assign a password. Passwords are assigned in the main menu under **Settings → System → Password**. A personal password protects the control unit against unauthorised access. Settings, justage, output tests, etc., can then no longer be performed without a password. You can still browse the menu and view the data logging.

If no password has been assigned for user level 1 (Technician), the system always switches to user level 1! If a password has been assigned for user level 1, the system switches to user level 0 (Customer) in automatic operation, *see Chapter 9.4, Operation* data sheet.
A password is always required for user level 2.

For changes and adjustments, you must log in with your personal password. When switching to the start display, the password must be entered again.

Hinweis

NOTICE!

Once a password has been assigned, unauthorised persons will be denied access to the control unit. The setting buttons will appear in grey. Desired changes can only be made after the password has been entered. Once a password has been assigned, make a note of it and keep it in a secure location.

6.3.2 Main menu → Settings (overview)

The "Settings" menu is used to implement the desired settings for the dosing device. Using the white arrow keys on the side, you can navigate to the next screen menu. The 2nd page is only displayed in user level 2 (Technician 1).



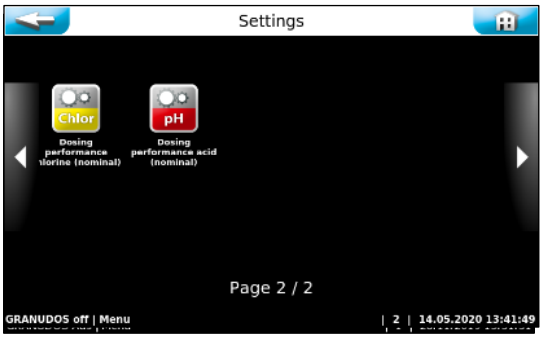

Reserve indication chlorine (*6.3.2.1*)
Set reserve indication for chlorine granulate

Reserve indication acid (*6.3.2.2*)
Set reserve indication for acid

System (*6.3.2.3*)
Set date, time, password, display, network and language

Determining the chlorine dosing performance (*6.3.2.4*)
The effective dosing performance for the chlorine granulate is determined

Dust extraction (option) (6.3.2.5)
Set parameters for dust extraction

Buffer (operation with feed system / buffer tank) (*6.3.2.6*)
Set dosing performance for Buffer tank filling function

pH monitoring (for operation with buffer tank) (*6.3.2.7*)
Set monitoring limits for the pH value

Delay booster pump (*6.3.2.8*)
Set delay time for the start of the booster pump

Dosing performance chlorine granulate (*6.3.2.9*)
Set device-specific parameters Preset ex works, can only be set in Technician 1 level

Dosing performance acid (*6.3.2.10*)
Set device-specific dosing parameters
Preset ex works, can only be set in Technician 1 level

6.3.2.1 Main menu → Settings → Reserve indication chlorine

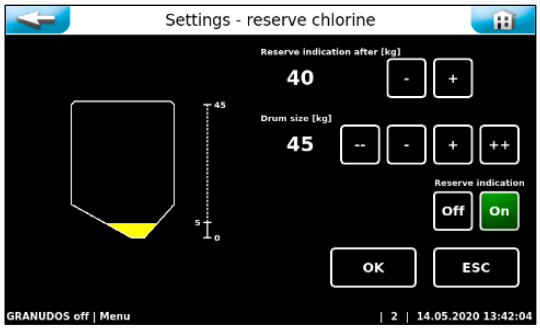

The quantities for which a reserve indication will be displayed after dosing are indicated here, as well as the filling volume of the full container.
The message indicates that the chemical container will soon be empty.

The reserve indication function can also be deactivated.

6.3.2.2 Main menu → Settings → Reserve indication acid

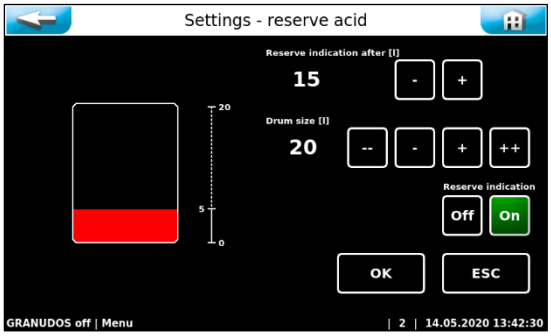

The quantities for which a reserve indication will be displayed after dosing are indicated here, as well as the filling volume of the full container.
The message indicates that the chemical container will soon be empty.

The reserve indication function can also be deactivated.

6.3.2.3 Main menu → Settings → System



Date/Time
Set date and time

Password
Assign a password

Display brightness
Adjust the display brightness to the ambient conditions

Network
Set network parameters

Reset
Reset all parameters to the factory settings

Language
Select the user language

System ID
You can assign a name for the device here. This name will subsequently be displayed during remote access

a) Main menu → Settings → System → Date/Time

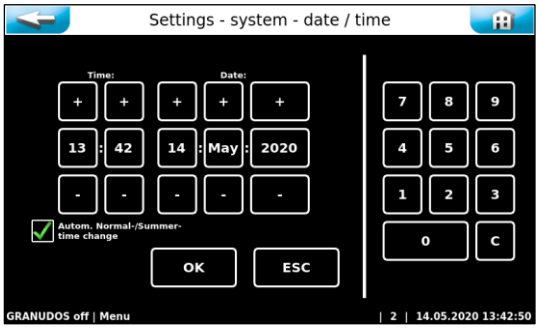

Adjust date and time.

You can activate automatic switching from winter to summer time.

b) Main menu → Settings → System → Password

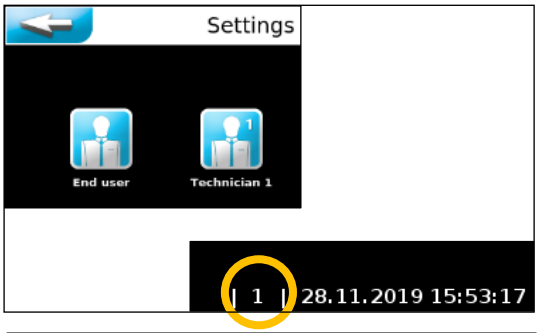

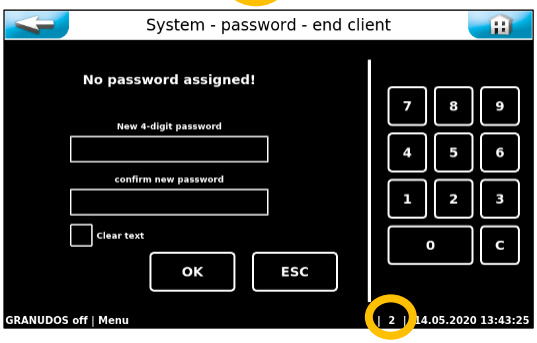

Guest (user level 0)
No password, read-only rights.

End user (user level 1)
No end user password is assigned ex works. We recommend the assignation of an end user password to protect the system against unauthorised access. Enter the password in the operation data sheet. The individual end user password must contain four digits between 0000 and 9999. In the second line, the password must be re-entered.

Technician 1 (user level 2)
The Technician 1 password consists of five digits and has an ex works default setting of 01234. This password is intended for the service partner. We recommend that you change this password as well and enter it in the operation data sheet.

If you place a green check mark next to Clear text, the entered numbers are shown instead of white dots.

To change an active end user password, it must be entered in the uppermost line. The new password must be entered in the two following lines.

If you wish to delete the end user password completely, simply enter the active password in the upper line. The other two lines remain empty.

If an incorrect password is entered, a fault indication appears.

Hinweis

NOTICE!
Make a note of the individually chosen passwords and store it securely in the operation data sheet. Lost passwords can only be reset by the factory customer service!

c) Main menu → Settings → System → Display

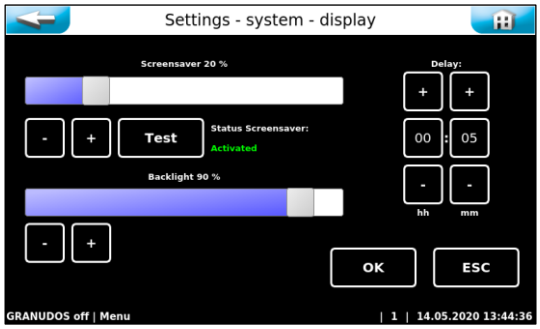

The screensaver dims the background lighting after the set delay time to the selected brightness.

The Test button can be used to test the settings.

The Backlight setting permanently reduces the background lighting in the operating mode.

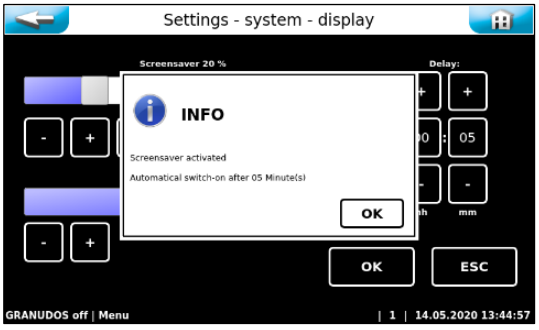

The screensaver can be activated or deactivated.

Save settings using OK and confirm the instruction text with OK.

Hinweis

NOTICE!

To extend the display's service life, reduce the background lighting to the minimal brightness required.

d) Main menu → Settings → System → Network → Configuration

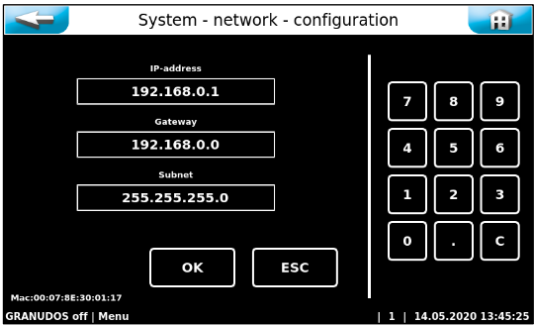

The touch panel has a LAN interface with an RJ45 socket. The current status messages can be transferred to an external display via this interface. The terminal device can be a PC monitor, a tablet PC or a smartphone, e.g.

Further information is available upon request. The operator must establish the necessary IT requirements for remote access! (e.g., VNP connection, data security, etc.)

e) Main menu → Settings → System → Reset

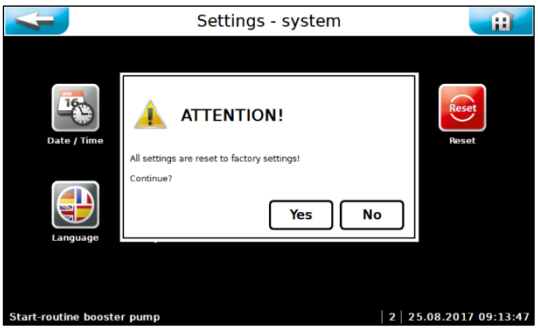

This command can only be performed in user level 2 (Technician 1).
All of the set parameters are reset here to the factory settings.
For ex works settings, see *Chapter 9.4,* Operation data sheet.

Subsequently, all parameters must be entered again!

f) Main menu → Settings → System → Language

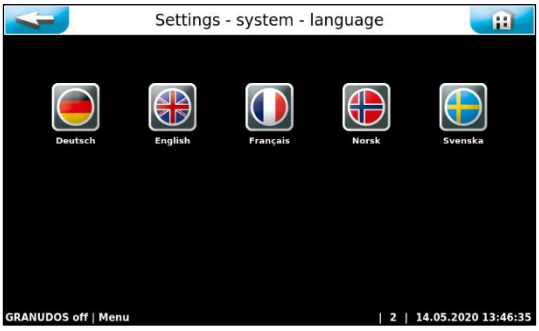

Select the desired operating language.

6.3.2.4 Main menu → Settings → Determining dosing performance

The effective dosing performance must be determined in order to calculate chemical consumption and thereby the reserve indication. Without this determination of the dosing performance, the calculations are carried out using the ex works settings, which can lead to deviations.
See *Chapter 5.2.122, Determining dosing performance = Nominal performance for the granulate dosing during commissioning.*
For acid dosing, an exact performance determination is not required, since the peristaltic pump is sufficiently precise.

6.3.2.5 Main menu → Settings → Dust extraction (option)

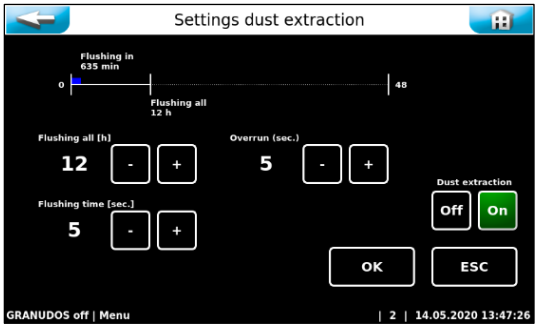

The dust extraction parameters are set here.

- Flushing: Set flushing interval; the flushing interval is the time between two flushing cycles. The blue bar indicates the time that has already elapsed.
- Run-on: Set run-on time, 0-60 sec, 0 = dust extraction deactivated; after completion of the chlorine dosing, the dust extractions continues to run for the set amount of time.
- Set flushing duration for transparent hose; the flushing valve opens for the set amount of time and the transparent hose is flushed.
- Switch dust extraction on / off (only possible in user level 2)
- Confirm settings using OK.

6.3.2.6 Main menu → Settings → Buffer tank / feed system

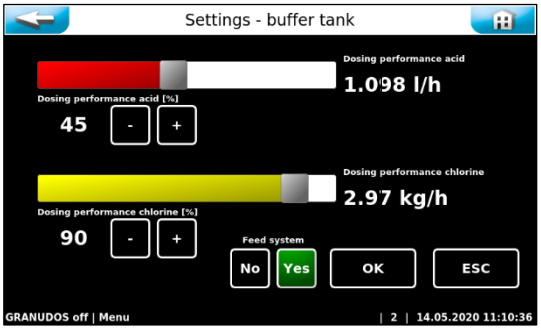

See Chapter 5.2.14 Setting the-dosing performance for chlorine and acid on the GRANUDOS (option), page 43.

6.3.2.7 Main menu → Settings → pH monitoring buffer tank

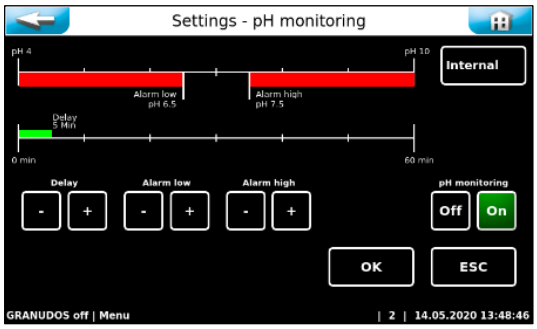

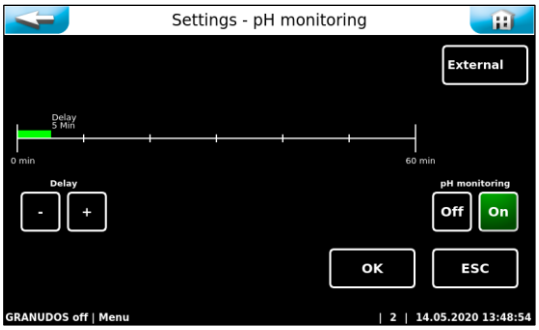

The parameters for pH monitoring and alarm message are set here.

- Delay: → adjustable time for complete mixing of the chlorine solution for an even pH value in the solution
- Alarm low: → lower alarm value
- Alarm high: → upper alarm value
- pH monitoring Off / On: → pH monitoring operating mode on / off (only possible in user level 2 = Technician 1)
- Internal / external: → pH monitoring via an internal or external measurement converter
- In the external setting, the alarm settings are hidden.

Info:
With an internal measurement converter, the pH electrode is connected to the measuring amplifier on the I-O board.
With an external measurement converter, a separate pH regulator is installed at the feed system.

6.3.2.8 Main menu → Settings → Delay Booster pump

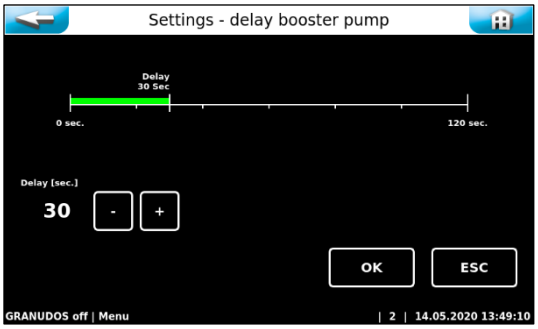

This function is active when the GRANUDOS is controlled externally (CCS off). Following a flushing of the swimming pool filter and after the set delay time has elapsed, the GRANUDOS is restarted. This ensures that no air remains in the pipe, which could lead to faults in the GRANUDOS.

6.3.2.9 Main menu → Settings → Installed dosing components / dosing performance chlorine granulate

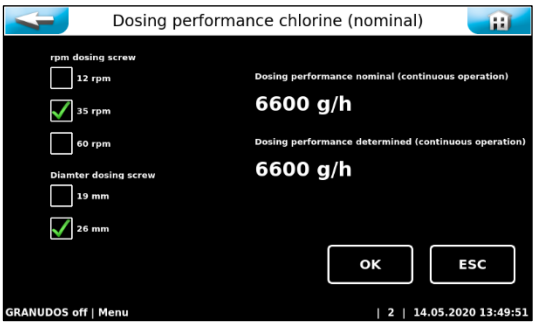

These settings can only be implemented in user level 2.
The values set here depend on the dosing device design. They are preset ex works in accordance with the installed components; they are used as the basis for calculating the dosed quantities and the reserve indication.

The dosing performance shown here pertains to the dosing in continuous operation under standard conditions. For a more precise determination of the dosing performance, see Chapter *5.2.12*.



Attention!
These values may only be changed if the appropriate components have been installed in the dosing device. Otherwise, the dosing quantities will be determined incorrectly, leading to a faulty reserve indication!

6.3.2.10 Main menu → Settings → Dosing performance acid - installed dosing components

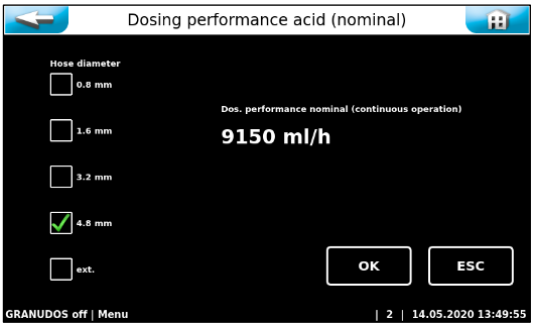

These settings can only be implemented in user level 2. The values set here depend on the dosing device design. They are preset ex works in accordance with the installed components; they are used as the basis for calculating the dosed quantities and the reserve indication.

If an **external acid pump** is used, "external" must be checked here and the dosing performance of the external pump must be entered to correctly record the remaining amount in the acid container.



Attention!
It is important that the correct dosing performance is entered; otherwise, incorrect consumption and remaining amounts will be calculated.

6.3.3 Main menu → Service



Input test
A test programme for switch inputs (electrical signals).

Output test
A test programme for pumps and relay outputs.

Operation hour counter
Counts the operating hours for booster pump, feed pump, acid dosing motor, and chlorine dosing motor.

Consumption counter
Counts the chemical consumption.

Maintenance interval
Setting the time interval for the maintenance message

Info
For querying the firmware versions.

6.3.3.1 Main menu → Service → Input test

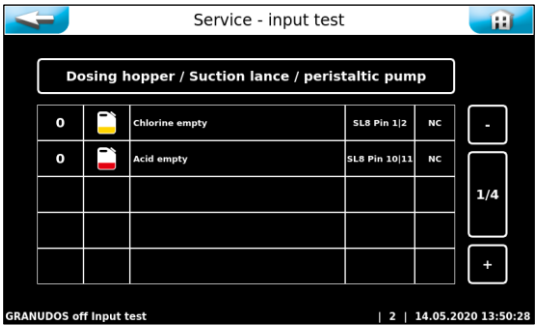

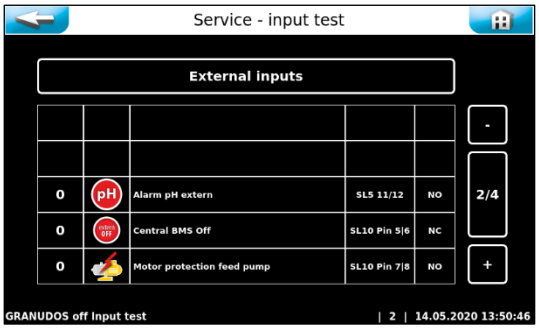

The input test is used to check the connected inputs (switches). The alternating activation of the switches is indicated by **0 (open) or 1 (closed)** in the column.
The fourth column displays the pin header (SLx) and the connectors (Pinx/x) to which the switch is connected.
The fifth column shows the function of the switches in the operating state.
NO (normally open) indicates open in the operating state and closed in the event of a fault.
NC (normally closed) indicates closed in the operating state and open in the event of a fault.
You can scroll through the 4 pages for the input test using the + and – buttons.

6.3.3.2 Main menu → Service → Output test

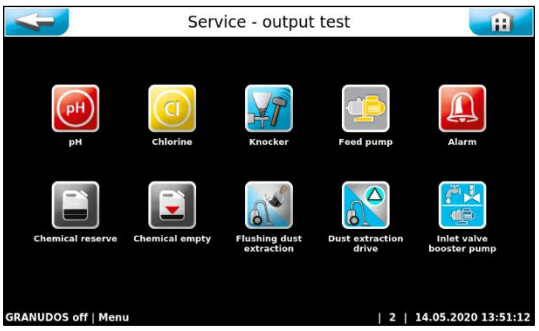

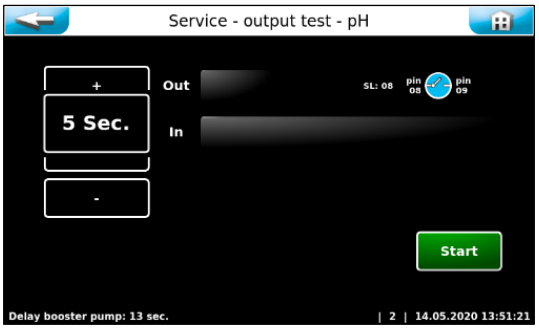

The output tests are used for checking the connected actuators (pumps, motors and relays). The selected output is activated for 5 or 30 seconds. The control can be deactivated at any time using Stop.

For safety reasons (chlorine gas formation), dosing tests can only be conducted if the booster pump is running and no fault exists that could prevent the dosing. That means if the system is stopped, the booster pump is started first.

An output test can be performed for the following actuators:

- pH = acid dosing
- Chlorine dosing
- Knocker
- Feed pump
- Alarm
- Chemical reserve - a joint output for both chemicals
- Chemical empty- a joint output for both chemicals
- Dust extraction flushing
- Dust extraction actuator
- Booster pump inlet valve, *(Control valve for the* dissolving water*)*

6.3.3.3 Main menu → Service → Operation hour counter

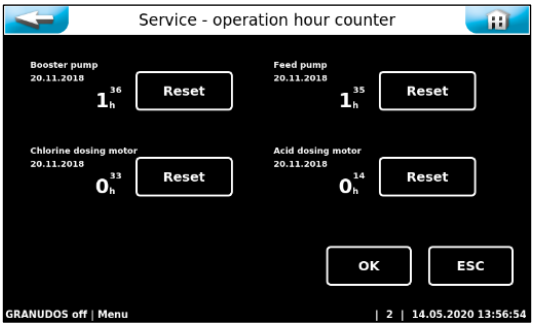

The components entire running times after the last restart are shown here. This is relevant, e.g., during maintenance work or when it is necessary to replace the pump.

These settings can only be implemented in user level 2. Use “Reset” to reset the operating hours for the respective actuators.

6.3.3.4 Main menu → Service → Consumption counter

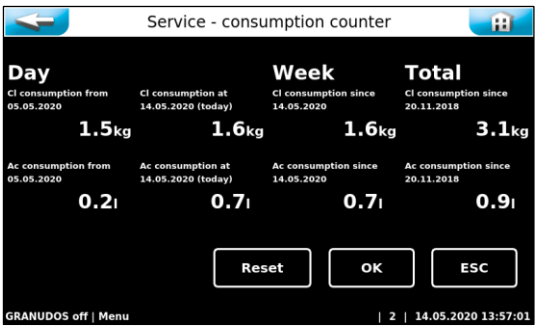

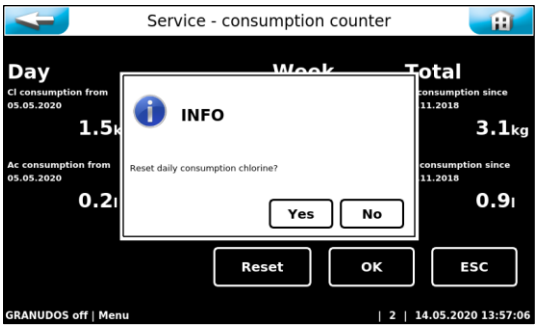

These settings can only be implemented in user level 2.
The consumption counter summarises the consumption of each chemical.
The consumption is calculated on the basis of the chlorine and acid dosing performance determined in Chapter 5.2.11 over the motors' entire running time. If the “Dosing performance determination” is not carried out, the calculation occurs based on the ex works settings.
The **Reset button** can be used to reset each individual consumption reading to 0.

Each value is queried and must be confirmed individually.

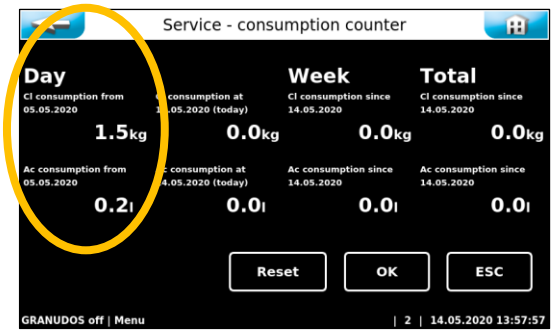

The previous operating day's consumption (left column) cannot be reset.

6.3.3.5 Main menu → Service → Maintenance interval

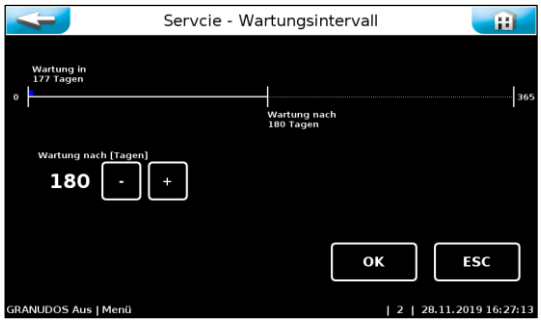

The time interval for the maintenance message in days is set here. After the set time interval the 

symbol is used on the start display as a reminder of any pending maintenance works.

The blue bar indicates the time that has already elapsed.
New: Once the maintenance interval has expired, a Reset button appears. This can be used to reset the time. (In level Technician 1= user level 2)
If the maintenance interval has not yet expired, the maintenance interval can be reduced using the minus button until the Reset button appears.

6.3.3.6 Main menu → Service → Info

The software and device data used can be viewed using the Info button.

The following are distinguished:
DSP version: → Firmware version
I/O version: → Coprocessor version on the I/O board
HTTP version: → Web front-end version (user interface software version).
Build: → Date of manufacturing

6.3.4 Main menu → Log (event and data logging)





Event Log
Displays a chronological list of the events that have occurred



Data export
This is used to export the collected data to a USB stick



Delete
This is used to delete the stored data



Event Log Justage
Displays a chronological list of the electrode justage

6.3.4.1 Main menu → Log → Event Log

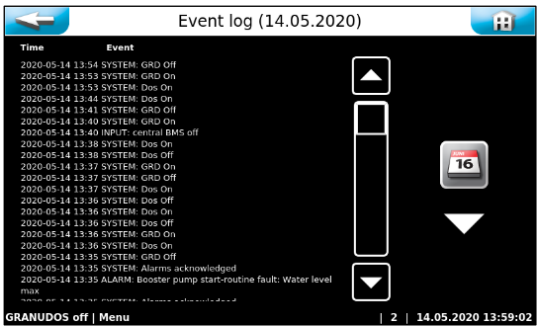

When calling up the menu, a list of events that occurred on this day will be displayed.
You can use the Calendar BUTTON to view events from previous days.

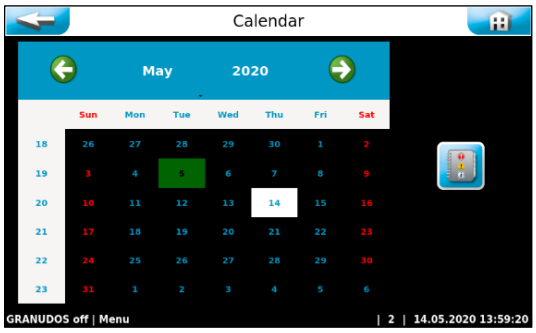

The current day is shown on a white background. Days on which the control unit was activated are shown on a green background. If you select another day by touching it, that day will be shown on a white background. You can use the **Event Log** button to view the events of the selected day.

6.3.4.2 Main menu → Log → Data export

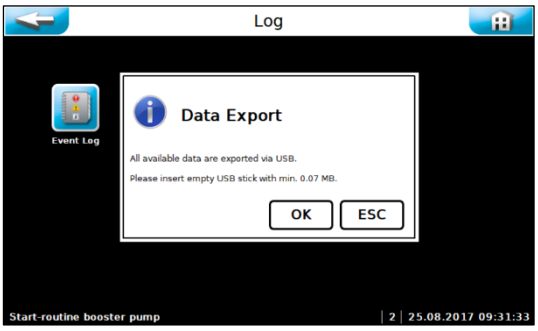

You can use the **Data export** menu item to load the stored log data onto an **empty USB stick**. If the USB stick is not empty, formatting is suggested and will be carried out after you confirm with OK.
The USB stick is inserted in the display's backside.

The daily event files and CSV files will then be stored on the USB stick.

6.3.4.3 Main menu → Log → Delete

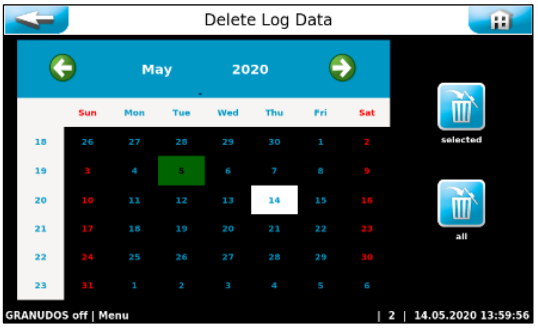

The current day is shown on a white background. Days on which the log files were stored are shown on a green background. If you select the desired day by touching it, that day will be shown on a white background. You can use the **Select button** to delete the event log events and the data log events for the selected day.
You can use the **All button** to delete all event log events and data log events at once.

6.3.5 Main menu → Calibration (Option for design with internal pH monitoring)

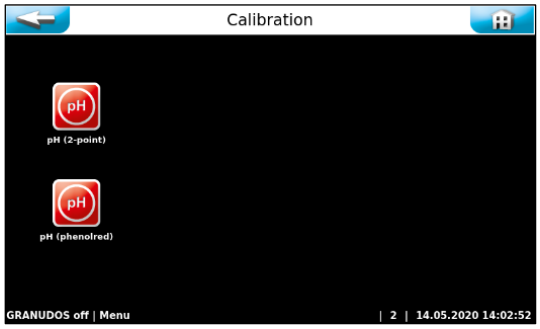

pH (2-point)
Two-point justage of the pH electrode

pH (phenol red)
One-point justage of the pH electrode

The justage is graphically guided and accompanied by a help text. Follow the menu prompts. **Confirm** the completed steps **with OK**.

Achtung!

ATTENTION!

During all work on the pH electrode, it must be ensured that neither the electrode's screw plug head nor the plug of the electrode cable are exposed to humidity! Even the smallest amount of humidity in the electrode head may lead to a distortion of the measuring value or even to a failure of the electrode!
All contacts in the electrode's plug head and on the electrode plug must display a shiny golden colour and may not show any signs of corrosion.

6.3.5.1 Main menu → Calibration → pH 2-point

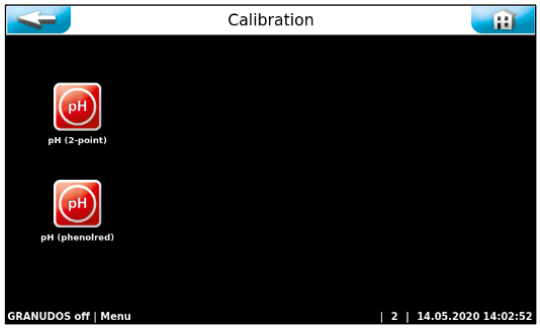

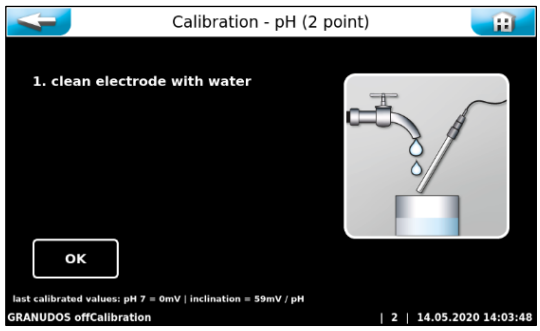

Perform the justage in accordance with the instructions.

pH7 = buffer solution for determining zero point voltage.
The optimal zero point voltage is at 0 mV up to +/-30 mV.

pH4 = second buffer solution for determining slope voltage.

Inclination mV/pH = slope voltage
The optimal slope voltage at 25°C is approx. 59 mV/pH.
(pH7 – pH4 = 3pH x 59 mV = 177 mV)

Example:
(mV(pH4) = 187 mV – mV(pH7) = 10 mV) = 177 mV ./. 3 pH = 59 mV/pH

Once the pH justage has been completed, the measuring results for the zero point voltage and slope voltage are displayed and an evaluation of the electrodes is carried out

Hinweis

NOTICE!

Notice regarding the evaluation of the electrodes

Cleaning notice
If the **zero point voltage** shows a deviation of less than +/-41 mV, the voltage rating will appear in yellow and the justage will be terminated with a cleaning notice.
If the **slope voltage** lies between 52 mV/pH and 63 mV/pH, the voltage rating will appear in yellow and the justage will be terminated with a cleaning notice.

Error notice
If the **zero point voltage** shows a deviation greater than +/-61 mV, the voltage rating will appear in red and the justage will be rejected with an error notice!
If the **slope voltage** is less than 50 mV/pH or greater than 65 mV/pH, the voltage rating will appear in red and the justage will be rejected with an error notice!

If the justage is rejected with an error notice, the device continues the control using the values from the most recent successful justage.
If the exchange of the electrode does not remedy the problem, the fault may be with the electrode cable or the measuring amplifier.

6.3.5.2 Main menu → Justage → pH phenol red

Notice regarding the justage with phenol red
A two-point justage of the pH electrode voids the last justage with phenol red.
Pay attention to the fact that the pH measurement with phenol red can show an error of +/- 0.1 - 0.2 pH.
In addition, the buffer solution is subject to an ageing process and may therefore return additional false values!

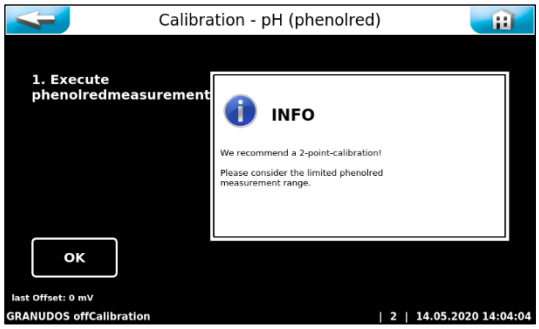

Perform the justage in accordance with the instructions.

Pay attention to the displayed notices. Follow the menu prompts.

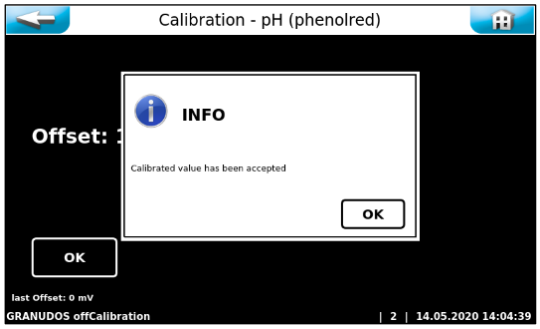

The set deviation is displayed as offset at the end of the menu. In case of minor deviations, the justage is adopted immediately.
For deviations greater than +/- 41 mV, a cleaning notice is given.
For deviations greater than +/- 61 mV, a change of the pH electrode will be suggested. If the justage is rejected with an error notice, the device continues the control using the values from the most recent successful justage.
If the exchange of the electrode does not remedy the problem, the fault may be with the electrode cable or the measuring amplifier.

Hinweis

Notice:
The justage of the pH electrode with phenol red must be carried out with water from the swimming pool. The chlorine solution in the buffer tank would destroy the colouring agent in the phenol red drops / tablet, thereby falsifying the measurement.

6.4 Justage of external pH monitoring (type NE)



For justage and operation, see separate instructions

6.5 Replenishing consumables

PROTECTIVE CLOTHING!
Personal safety equipment must be put on when handling chemicals: Protective gloves, apron, face protection, respiratory protection, boots
Pay attention to the safety data sheets for each chemical.

Replenish acid
Replacing the acid canister, see *Chapter 5.2.2, Preparing* acid dosing for operation.
Pay attention to the specifications for each chemical listed in the safety data sheets!

Replenish chlorine granulate
Replacing the chlorine granulate, see *Chapter 5.2.3, Attaching* / changing the drum.

7 Maintenance, care, fault

7.1 Device maintenance

We recommend that you assign a specialist firm to carry out regular maintenance.

To ensure the proper function of the GRANUDOS dosing system, pay attention to the following points:



DANGER DUE TO ELECTRICAL VOLTAGE!

Before any electrical work is carried out, the device must be disconnected from the power supply and secured against being reactivated!
All electrical work on the device must only be carried out by trained specialists in accordance with the applicable safety regulations!

During all repair and maintenance work, the valves must be closed and the lines depressurised to prevent injury.

Opening and closing the casing: *see Chapter 4.5.1, page 29.*



Tip!

The maintenance work required for trouble-free operation is listed in the maintenance protocol in *Chapter 9.5*. These tasks should be documented in the maintenance protocol as proof of work.

7.1.1 Cleaning the dirt filter

When working on lines that carry water, always close the inlet and outlet valves!



ATTENTION!

A clean dirt filter is important for proper functioning. A dirty filter can lead to cavitation in the pump, causing a reduced performance and damage to the bearings. It is essential that you clean the dirt filter outside of the GRANUDOS.

Cleaning the dirt filter *(Pos. 55, Figure 5, page 12)*

- Loosen the upper d75 and lower d25 pipe unions at the filter and completely remove the filter from its bracket.
- Pull out the filter insert.
- Clean the filter insert and the filter hood under running water.
- Reinstall the filter in the reverse sequence.

7.1.2 Replacing the dosing screw and the dust gasket

Removal / installation of the protective cover

a) Push the dust protection pipe (*11*) downward.
b) Release the spring bolt (*09*) of the turning device and rotate the turning device with the drum clockwise from the dosing position upward; while doing so, keep the dosing pipe covered with a finger to prevent any granulate from escaping. Relock the turning device.
c) Loosen the safety belt (*03*).
d) Loosen the attachment screws of the protective cover, remove the cover – pull the cables slightly inward to ensure improved cover mobility
e) To install the protective cover, follow the procedure in reverse sequence

PROTECTIVE CLOTHING!
Put on personal safety equipment prior to starting the work:
Protective gloves, apron, face protection, respiratory protection, boots
Pay attention to the safety data sheets for each chemical.

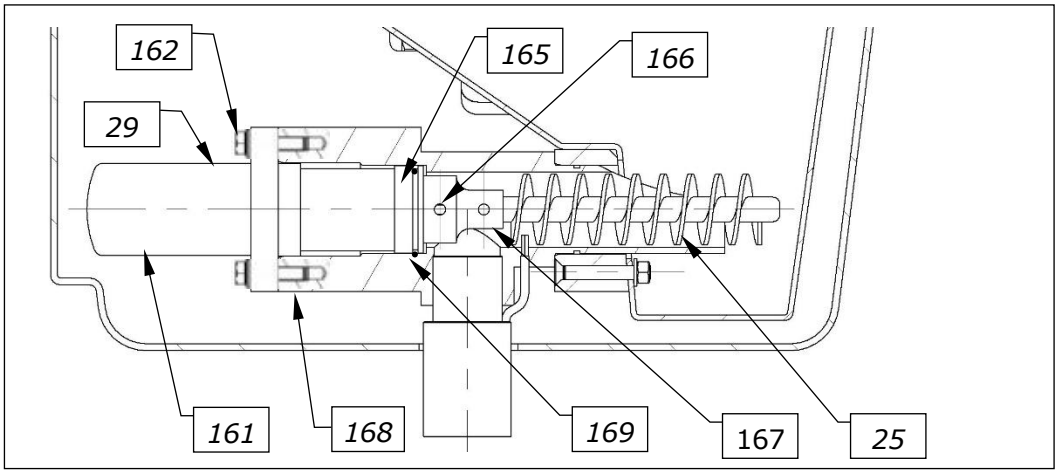

Figure 40, Dosing motor with dosing screw

25. Dosing screw
29. Dosing motor
161. Protective cover for motor
162. Screw M5x20
163. Diaphragm (covered)
164. Felt washer (covered)
165. Dust cover
166. Grub screw
167. PVC adapter for dosing screw
168. Motor bracket
169. O-ring

Required tools for replacing the dosing screw or the dosing motor

a) Phillips screwdriver PZ2 to loosen the screws on the cover and control unit
b) Flat-head screwdriver 2 mm to loosen the cable clamps,
c) Wrench 8mm to loosen the dosing motor
d) Measuring device (multimeter) for measuring the voltage
e) Small knife or screwdriver to clean the grub screw
f) Allen wrench 2.5 mm for the grub screw on the dosing screw

7.1.2.1 Removal of the dosing motor and the dosing screw

a) Rotate the drum upward and lock it
b) Loosen the attachment screws of the protective cover, remove the cover – pull the cables slightly inward to ensure improved cover mobility
c) Open the connection socket at the dosing hopper if the motor shall be deinstalled.
d) Remove the protective caps from the attachment screws M5x20 (*162*) and unscrew the screws using a key SW 8,
e) Pull the motor with the dosing screw from the motor bracket (*168*) – to do so, hold a flat collecting basin (or your hand) under the motor bracket to avoid scattering any chlorine granulate. Clean the inside of the motor bracket and remove any scattered chlorine grains.
f) Clean the dosing screw – Is the chlorine granulate inside the screw heavily solidified or does the granulate easily scatter from the screw when the latter is pulled out?
g) If the granulate is solidified, it may be too moist or have an excessive dust content. It is also possible that the screw is too worn and the granulate is no longer properly transported.

7.1.2.2 Maintenance of the dosing motor

a) Disconnect the motor cable in the terminal casing at the hopper and pull the cable from the grommet.
b) Use a small screwdriver, knife or a similar tool to scrape the putty from the thread hole of the grub screw *(166)* on the dosing screw's PVC adapter.
c) Loosen the grub screw with an Allen wrench SW 2.5 and pull the dosing screw from the shaft.
d) Pull the dust cover from the dosing motor and remove the old sealing washers.
e) Spread silicon grease on both sides of the new felt washer.

f) Fill the bearing indentations at the dosing motor with silicon grease.
g) First push the EPDM (rubber) sealing washer on the shaft, followed by the greased felt washer, and firmly push the dust cover (*165*) on the motor.
h) Remove the old O-ring *(169)* from the dust cover's groove, insert a new O-ring, and apply approx. 2 layers of Teflon tape.
i) Spread silicon grease on the front surfaces of the dosing motor/PVC dust cover and the dosing screw.
j) Push the dosing screw on the shaft so that the grub screw (*166*) is located on the flat part of the motor shaft.
k) Press the dosing screw against the motor and lightly fasten the grub screw.

Achtung!

ATTENTION!
Do not fasten too tightly, as this may strip the PVC thread.

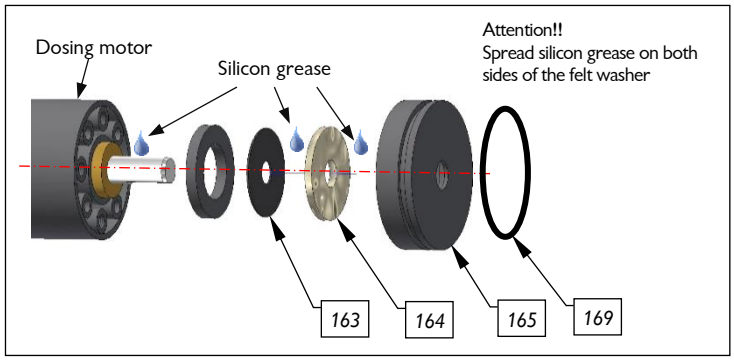

163. Diaphragm
164. Felt washer
165. Dust cover
169. O-ring

Figure 41, Dosing motor

l) Thoroughly close the thread bore with putty.
m) Insert cable in the connection socket – apply a small amount of silicon grease, if needed, and connect the cables: white on white, brown on brown
n) Test the dosing motor's functioning with the output test
o) Push the dosing motor into the - cleaned - motor bracket and evenly screw tight with the new screws M5x20. Attach protective caps.

Achtung!

ATTENTION!
Without putty, the grub screw will heavily corrode within a short time and can no longer be unscrewed. If the dosing screw or the motor must be replaced again at a later time, both parts would then have to be replaced together!

7.1.2.3 Replacing the dosing motor only

Dismantling the motor according to *7.1.2.1*
a) Entirely unscrew the threaded pin from the old dosing screw and insert a new threaded pin.
b) Clean the front surface of the old dosing screw's PVC adapter and apply a layer of silicon grease.
c) Open the connection socket at the dosing hopper.
d) Loosen the connectors of the dosing motor cable (brown - white).
e) Pull in a new motor cable and clamp tight: brown on brown, white on white.
f) Push the dosing screw on the shaft so that the grub screw is located on the flat part of the motor shaft, press firmly against motor and tighten the grub screw.
g) Push the motor with dosing screw back into the cleaned bracket.
h) Screw on the flange – not too tightly.
i) Press the protective caps onto the screw heads.
j) Place a new O-ring *(169)* on the dosing screw's guide pipe, wrap with Teflon tape (approx. 3 layers), and apply grease.
k) Push the dosing unit into the bracket.

7.1.2.4 Replacing the dosing screw only

When only replacing the dosing screw, also renew the seal in the dust protection cap. Sealing washers made of EPDM and felt are included in the scope of delivery.

a) Pull the dust cap from the dosing motor.
b) Remove the old gasket from the dust cap.
c) Thoroughly clean the dosing motor's shaft.
d) Apply a layer of fresh silicon grease to the ball bearing.
e) Press a diaphragm (sealing washer) 19/4x0.5 EPDM *(163)* on the shaft.
f) Thoroughly grease the felt washer *(164)* and push it on the shaft.
g) Then push the dust cap (*165*) over it.
h) Undo the old Teflon tape and apply approx. 3 layers of new tape.
i) Apply a layer of silicon grease to the front surface of the new dosing screw's adapter.
j) Push the dosing screw on the shaft so that the threaded pin is located on the flat part of the motor shaft, press firmly against motor and tighten the threaded pin.
k) Push the motor with dosing screw back into the cleaned (!) bracket.
l) Screw on the flange – not too tightly.
m) Press the protective caps onto the screw heads.
n) Perform dosing capacity determination, *see Chapter 5.2.12, page 41*

7.1.3 Injector with suction pipe and flow switch

Overview
45. Injector
49. Suction pipe with flow switch (with LED)

171. Diffuser nozzle with installed hole washer
172. Union nut for flow switch
173. Viton hose to the flushing tub
174. Switch body (in the suction pipe)
175. Suction pipe
176. Pipe union of injector inlet
177. Pipe union of injector outlet

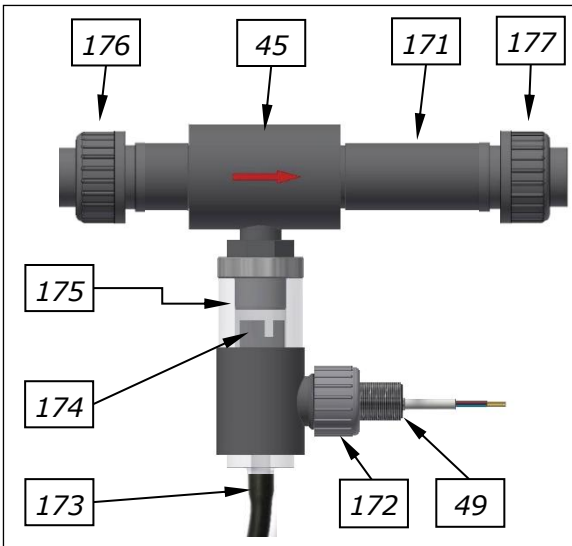

Figure 42, Injector with flow switch d 40

Replace the hole washer:
Loosen the union nuts (*176 + 177*) and rotate the injector out. The hole washer is sealed into the O-ring at the diffuser nozzle's (*171*) inner thread (177). Pry out this hole washer with a small screwdriver. Insert another hole washer or leave the washer out, as needed.

7.1.4 Maintenance and setting of the float control valve for the flushing tub inlet

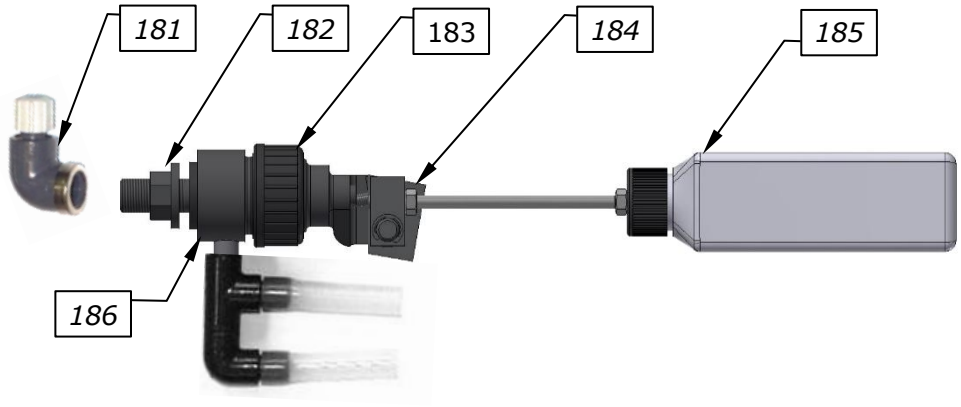

Figure 43, Complete float control valve and tappet for floating valve

Overview floating valve, complete
181. Connecting angle 3/8" for flushing water hose 6x1 mm
182. 3/8" nut
183. Union nut for float assembly group
184. Adjustment screw for water level
185. Float 250 ml
186. Floating valve body with seal

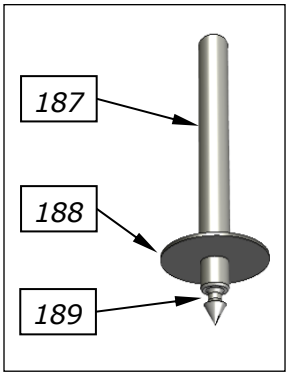

Overview of floating valve tappet
187. Tappet
188. Diaphragm
189. Valve cone with O-ring

Replace the diaphragm
a) Loosen the union nut (*183*) and remove the upper part of the floating valve.
b) Remove the tappet assembly group *(187 to 189)*.
c) Pull the valve cone *(189)* out of the tappet (*187*).
d) Push a new diaphragm (*188*) onto the valve cone.
e) Replace the O-ring on the valve cone (*189*) as well.
f) Reinstall in the reverse sequence.
g) Reset the water level in the flushing tub. *See Chapter 5.2.7.*

7.1.5 Replacing and setting the Chlorine empty switch at the dosing hopper

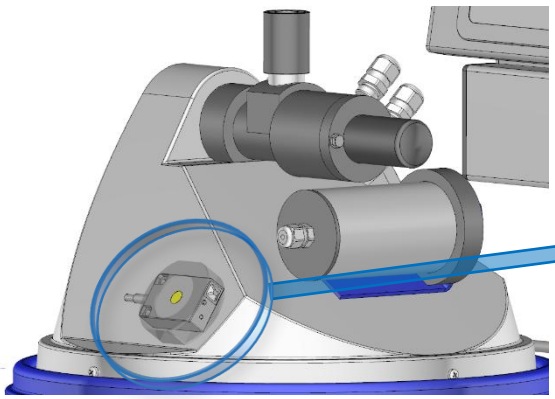

Figure 44, Empty switch for GR VARIO

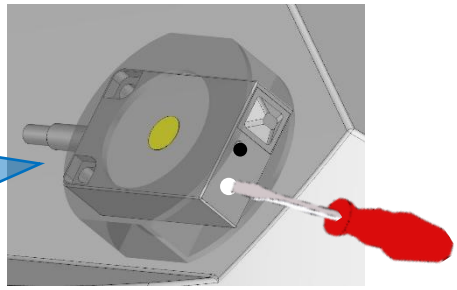

Figure 45, Empty switch installed on GR VARIO

At the GRANUDOS, the empty switch can be accessed after removing the protective cover. The small adjustment screw with the switch LED can be seen on top of the narrow side. When the drum is empty or the dosing hopper with the drum has been turned upward, this LED must **not** be illuminated; the display must show **Chlorine empty**.

If the switch LED is illuminated, turn the adjustment screw slowly to the left until the LED goes out. The **Chlorine empty** fault display at the control unit reacts with a **6-second delay**.
It the switch does not react to the adjustment potentiometer or if the adjustment screw has been destroyed, a new switch must be installed.

Adjust the empty switch (drum rotated upward)
Turn the adjustment screw to the right until the switch LED lights up
Then carefully turn it back until the switch LED goes out, followed by an additional 10° turn
The **Chlorine empty** fault is displayed at the control unit. After rotating a drum that is **not empty** into the dosing position, the fault indication at the control unit goes out – provided there is chlorine in the drum.

Replace empty switch
a) Open the connection socket and disconnect the 3 switch wires, pull out the cable.
b) Push the old switch out of the bracket.
c) Push the new switch into the bracket until it snaps into place.
d) Insert the cable in the connection socket and clamp on according to the wiring diagram.
e) Close the terminal casing and fill the screw heads with grease to prevent any corrosion.
f) Adjust the switch, as described above.

7.1.6 Justage of the "No chlorine switch" on the dissolve cyclone

Tipp

Tip!
The No chlorine switch is preset ex works and must only be recalibrated in case of a malfunction. The LED on the No chlorine switch and the adjustment screw become visible when the protective cap of the No chlorine switch (*51*) is removed. Without chlorine in the cyclone (*50*), the LED on the No chlorine switch should not be illuminated!
The justage is only possible when "Buffer tank filling" is activated.

The No chlorine switch is installed *at the Dissolving* cyclone *(50)*. After the start of the 2nd dosing cycle, within 8 seconds the red LED at the No chlorine switch must be continuously illuminated for at least 2 seconds, due to registering the rotating chlorine. Otherwise, a fault indication 

is displayed and the GRANUDOS PLUS switches off.

Justage:

a) Deactivate the alarm relay  and/or start the GRANUDOS PLUS:

b) Then switch off the dosing 

; the GRANUDOS PLUS now only conveys water into the buffer tank.
c) Wait until no more granulate can be seen in the cyclone.
d) Turn the yellow adjustment screw at the sensor in a clockwise direction until the red LED on the sensor is illuminated.
e) Then slowly turn it back until the LED goes out again; at this point, stop immediately.
f) The sensor is now recalibrated.
g) Switch on the dosing 

.

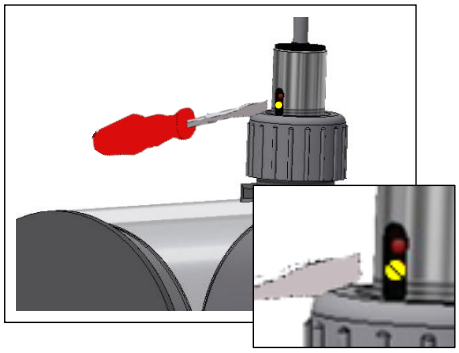

Figure 46, No chlorine switch

7.1.7 Replacing the dosing hose of the acid dosing pump

The pump hose in the pump is subject to mechanical and chemical stresses. Therefore, the pump hose must be checked at regular intervals; it should be exchanged annually, see maintenance protocol

Individual components of the peristaltic pump

Peristaltic pump type Sa

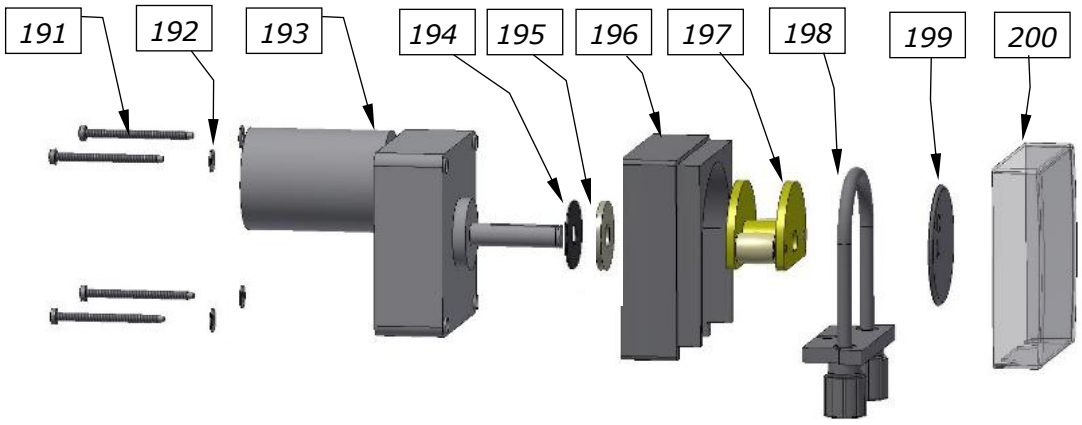

Figure 47, Individual components of the peristaltic pump

Key:

191. Screw
192. Flat washer
193. Gear motor
194. Sealing washer EPDM
195. Felt washer
196. Pump casing
197. Roller carrier
198. Hose bracket with dosing hose
199. Safety disc
200. Transparent protective cover



ATTENTION!

The new hose must be of the same colour and size as the disassembled hose. The hose must not be twisted when inserted! The markings on the hose must be centred at the front (see picture below).

Replace pump hose on the hose bracket:

1. Disassemble the hose kit, see *Chapter 5.2.1, Installation of peristaltic* pump, roller carrier*page 31.*
2. To replace the dosing hose, carefully cut the hose clamps with a sharp knife or pliers! Never damage the hose nipples!
3. Push the new dosing hose onto the hose nipples so that the markings on the hose ends are located in the front! This ensures that the hose is not twisted.
4. Attach the hose ends using the hose clamps and cut off the protruding ends of the hose clamps.
5. Install the hose kit – *see 5.2.1*

Overview; Individual components of the hose bracket kit

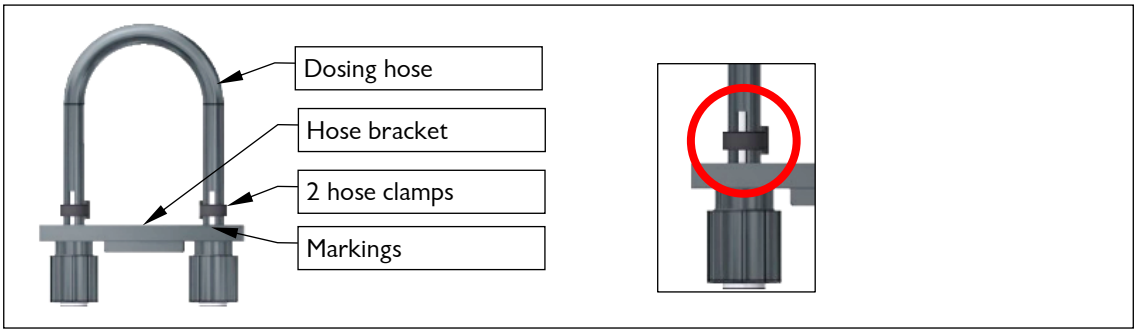

Figure 48: Hose bracket kit

7.1.8 Cleaning the dust extraction (option)

CAUTION!

Due to the aggressive chlorine dust, personal safety equipment must be put on prior to starting the work: Protective gloves, apron, face protection.

Tip!

Cleaning: Once the flushing action abates, the **flushing ring** can be removed, disassembled and cleaned. Ensure that the original screws are reused, since they are made of a chloride-resistant material. Using other materials may cause the screws to corrode. This results in rust-coloured stains.

Overview dust extraction

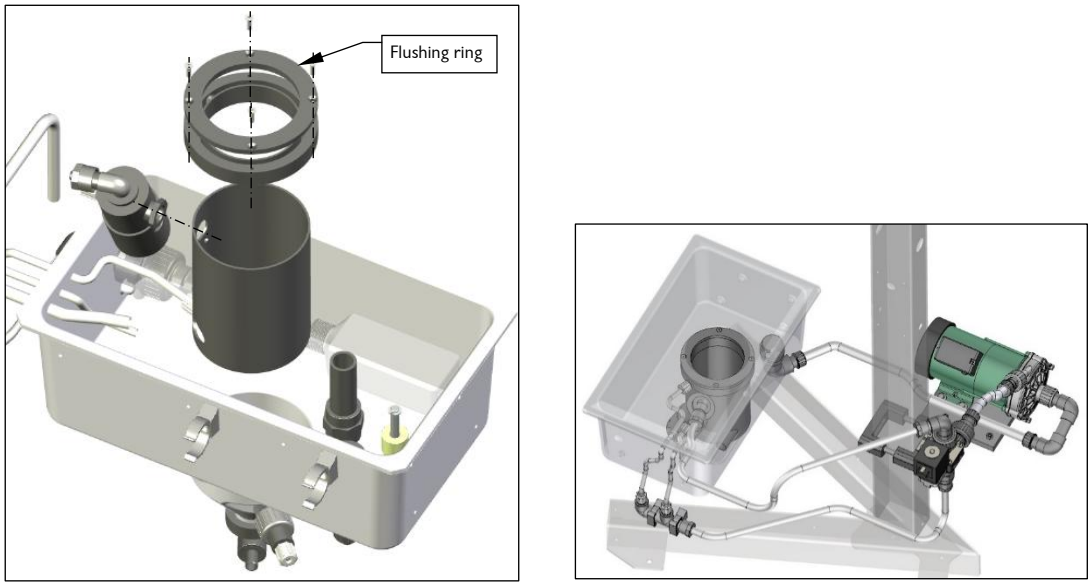

Figure 49, Dust extraction

Procedure

a) Remove, disassemble and clean the **flushing ring** (see exploded drawing).
b) Then reassemble the flushing ring. Ensure that the **original screws are used again** during reassembly, since they are made of chloride-resistant material. Using other materials may cause the screws to corrode.

7.2 pH measurement – calibrating the pH electrode (buffer tank)

pH electrodes are wear parts. In the field of swimming pool water treatment, a life span of 6 months to 2 years may be expected.
The contamination of the electrode's diaphragm may be one reason for measuring value deviations. This contamination can usually be cleaned using the electrode cleaner supplied with the delivery.

NOTICE!

After each cleaning or exchange of the electrode, a justage must be carried out! Do not touch the glass top (sensor part) and the diaphragm with your fingers. Dab the glass top with a clean and soft cloth.

For electrode cleaning procedure, see Chapter *6.3.5, page 62.*
The pH value of the chlorine solution in the buffer tank should be checked regularly (every 2 months).

7.3 Fault removal

Tipp

Tip!



All faults and notifications are displayed on the touch screen in the IN list. In addition, they may be queried in the Event Log.
A fault will only be displayed once it has occurred uninterrupted for at least 6 seconds.
Attention! In the event of a fault indication, it is also possible that switches or sensors are faulty and thus do not transmit any electric signals.

Tipp

Tip!

Encrustations of chlorine granulate in the dosing hopper can lead to malfunctions. Clean the dosing hopper according to the maintenance protocol.

For fault table, see following page.

Fault display	Cause / effect	Actions
1. Chlorine empty ALARM: Chlorine granulate container empty	The GRANUDOS stops. The shut-off valve and the booster pump are turned off	1. Refill chlorine granulate, or change container 2. If the chlorine granulate is not empty, recalibrate the empty switch or 3. Renew the empty switch.
2. Acid empty ALARM: Acid container empty	The GRANUDOS stops The shut-off valve and the booster pump are turned off	1. Replace the empty acid container with a full one 2. If the acid container is not empty, the empty switch is faulty. 3. If the suction lance is new, check the float's functional direction – float at the bottom = empty display; otherwise, turn the float
3. Fill level reserve chlorine/acid INDICATION:	This indication is for information purposes only, no action ensues.	Ensure sufficient resupplies.
4. Minimum pressure ALARM: The flow pressure at the booster pump is too low	Dosing is stopped. The booster pump has been deactivated. 1. Supply pressure too low 2. Booster pump faulty 3. Pressure switch faulty	Check pump Set a lower response pressure at the pressure switch
5. Flushing tub level minimum ALARM: Water minimum switch active. The water level in the flushing tub is low; more water is suctioned off than runs into the flushing tub through the floating valve.	Cause: Inlet pressure too high, Counter-pressure too low Dosing is stopped. The booster pump has been deactivated. Floating valve defective? Switch defective?	1. Floating valve function: The water inlet should gently follow the float's movement. If OK, calibrate the water level. See operating instructions for the dosing unit, *Chapter Commissioning* 5.2.7. If this is not the case, insert a new diaphragm in the floating valve. 2. Insert a hole washer with a smaller drill hole 3. Dirt filter (Pos.55) contaminated → clean filter 4. If water level is not at minimum, insert a new switch
6. Flushing tub level maximum ALARM: Water maximum switch active. The water level in the flushing tub is too high, less water is siphoned off than is flowing into the flushing tub through the floating valve.	Cause: Counter-pressure to high Floating valve defective Dosing is stopped. The booster pump has been deactivated. Switch defective?	1. If the injector's suction performance is OK: Floating valve function: The water inlet should gently follow the float's movement. If OK, calibrate the water level. See operating instructions for the dosing unit, *Chapter Commissioning* 5.2.7. If this is not the case, insert a new diaphragm in the floating valve. 2. If the suction capacity is not sufficient, see under fault display "**Suction pipe flow minimum ALARM**" 3. If water level is not at maximum, insert a new switch
7. Suction pipe flow minimum ALARM: The water flow in the suction pipe is too low. The switch body of the flow switch does not rise, the switch LED lights up.	Dosing is stopped. The booster pump is stopped.	1. Check the function of the booster pump. 2. Dirt filter contaminated → clean filter 3. Blocked suction opening in the flushing tub 4. There may be particles in the injector, both at the nozzle or in the suction pipe, due to particles entering during installation or from the chlorine drum 5. Insert a hole washer with a larger drill hole or remove it entirely 6. Blocked non-return valve at the buffer tank 7. Injector's diffuser nozzle worn out; if D > 6.5 mm, replace diffuser nozzle
8. Chlorine in cyclone dosing monitor ALARM: (with buffer tank) The optical sensor on the dissolving cyclone is activated.	The sensor on the cyclone indicates that during the 2nd dosing interval, insufficient chlorine was dosed/is present in the cyclone.	1. Fault during dosing: Clotting in chlorine granulate Dosing screw blocked due to poor chlorine quality (too fine, moist) 2. The dosing motor is defective. 3. Calibrate the optical sensor.

9. ALARM: Fuse for the chlorine dosing motor or acid dosing motor or supply of the 24 V sensors See log file in regard to the differentiation between the individual safeguards	The dosing and booster pump stop	Check chlorine motor for blockages, remove blockage, if necessary, and renew the fuse. Check the acid dosing motor and renew the fuse. Check the Chlorine empty, No chlorine and Flow minimum sensors; renew the defective sensor and the fuse.
10. Buffer tank filling start INDICATION:	The filling starts. Booster pump and *Control* valve for *the* dissolving water active	The dosing device starts to produce chlorine solution at the set dosing performance.
11. Buffer tank filling stop INDICACTION:	The filling with chlorine solution stops.	The flushing programme starts; afterwards, the programme switches into “Standby”
12. Buffer tank minimum level ALARM:	The lower control switch for starting the filling did not trigger. Feed pump is switched off	a) Check switch function: If the tank is empty, the switch contact must be closed (measure at the terminal). If open: Switch or terminal contact faulty b) The sum of the flow capacity of all dosing lines is higher than the filling capacity of the GRANUDOS. Increase the chlorine dosing performance at the GRANUDOS
13. Buffer tank level maximum ALARM:	During the filling process, the upper maximum level control switch for stopping the filling did not trigger. The GRANUDOS switches off. When the control valves are closed, there may be backflow from the dosing lines. When the feed pump is stopped: The feed pump starts the **emergency operation** programme **(displayed in the status line).**	a) Check the “Stop buffer tank fill level” switch: If the tank is full, the switch contact of the “Stop buffer tank fill level” switch must be closed (measure at the terminal). If it is open when the buffer tank is full, the switch or terminal contact is faulty. If the "Stop buffer tank fill level" switch is working properly: Check → *Control valve for the* dissolving water for proper function – does not close?
14. Protection tub level ALARM:	The level switch in the protection tub reports liquid in the protection tub. For causes, see fault indication 13 In addition: The GRANUDOS does not switch off if the Level maximum alarm also does not react	a) Buffer tank is overflowing or leaking b) "Stop buffer tank fill level” **and** “Level maximum alarm” level switches at buffer tank defective. → Renew level switches c) Control valve and non-return valve in a dosing line are leaking (when the feed pump is not running) → Renew valves d) Control valve for the dissolving water
15. CCS (Central Control System) OFF, INDICATION:	The dosing device stops	No action, since it has been deactivated externally.
16. pH monitoring ALARM: Only active for design with pH monitoring 	1. If the pH value is too high: → Clouded flow meters 2. If the pH value is too low: →The solution has a strong chlorine odour	1. Calibrate pH monitoring 2. If the pH value is high: Check the acid dosing a. Function of the dosing pump/pump relay b. Dosing hose, roller carrier c. Leakage at the suction line d. Dosing valve blocked e. Increase dosing performance for acid 3. If the pH value is low: a. Increase chlorine dosing performance b. Reduce acid dosing
17. Feed pump motor protection ALARM:	The feed pump’s motor protection switch has triggered → The dosing device stops	Check of the pump motor and the electric supply
18. GRANUDOS OFF, check PB start and PB stop ALARM:	The level switches at the buffer tank report “Start filling” and “Stop filling” simultaneously	Both level switches have been triggered, check / renew level switches

Malfunctions without display in the device:

1. **The display is dark and the device is turned off:**

a) No supply voltage: → Restore the supply voltage
b) The main fuse at the lower left of the housing has blown: → Renew fuse – determine the cause
c) The fuse F1 at the power pack has blown: → Renew fuse – determine the cause
d) The power pack is defective: → Renew power pack

2. **The flushing tub overflows when shutting down the GRANUDOS: → In this case, check the following parts:**

a) Leaking floating valve: → Renew diaphragm
b) Control valve for the dissolving water does not close: → Check valve
c) Non-return valve in the filling line to the buffer tank does not close: → Check non-return valve

3. **The device does not save the entered values. (e.g., dosing performance):**

a) SD card defective → Renew the SD card with original software.

4. **Dust extraction (option)**

Fault	Cause	Remedy
Suction / flushing does not work	Dust extraction pump without function	Check pump function
	Solenoid valve without function	Check solenoid valve function
	Flushing tub empty or pump inlet plugged	Check the fill level in the filling tub Check the outlet connection of the flushing tub
	Hose broken or plugged	Visual check of the hose connections; clean, if necessary
Suction / flushing limited function	Flushing ring dirty	Clean flushing ring
	Pump draws air or is not properly vented Pump inlet dirty or plugged	Check connections Properly vent pump Check inlet and clean, if necessary
	Hoses dirty	Check hoses and clean, if necessary
	Solenoid valve, disconnect lever with seal worn out	Renew separating lever with seal (Code no. 12829)

Switch contact to the corresponding fault indication:

Designation	Situation	Switch contact	Display in the "IN" list
Dosing device			
1. D-min alarm, b-pump flushing tub	no pressure at pump	open	Yes
2. W-min alarm, flushing tub	Float at the bottom	closed	Yes
3. W-max alarm, flushing tub	Float at the top	closed	Yes
4. Df-min alarm, flushing tub	Switch body at the bottom	closed	Yes
5. No chlorine alarm	No granulate in the cyclone	open	Yes
6. Chlorine empty alarm	No chlorine	open	Yes
7. Acid empty, acid container alarm	Float at the bottom	open	Yes
Feed system			
8. "Start filling" level. Buffer tank notification	Float at the bottom	closed	Yes
9. "Stop filling" level buffer tank notification	Float at the top	closed	Yes
10. 11 Level min. alarm, buffer tank	Float at the bottom	closed	Yes
11. Level max. alarm, buffer tank	Float at the top	open	Yes
12. Level protection tub alarm	Float at the top	closed	Yes
13. pH monitoring alarm	pH value not within the tolerance range	closed	Yes
14. Feed pump motor protection alarm	Motor protection switch is triggered	closed	Yes
Other			
15. CCS (Central Control System) off, notification	Input CCS,	open	Yes

8 Decommissioning – Storage – Disposal

8.1 General

In the event of decommissioning and risk of frost, the devices must be emptied completely and protected against frost!

8.2 Decommissioning of the GRANUDOS PLUS dosing device

a) Remove the suction lances from the acid canister and place it in a bucket filled with clean water. Then start the acid output test.
b) Dismount the chlorine drum from the GRANUDOS and close it securely
c) Empty the dosing hopper into the chlorine drum and thoroughly clean it.
d) Carefully remove any remaining calcium hypochlorite in the device. Open the dosing valves, stop the dosing via the 

button and allow the system to run for 2-3 hours without dosing. See also Chapter 8.3
e) Disassemble the dosing motor with the dosing screw from the dosing hopper, thoroughly clean the dosing motor with the dosing screw and store it in a dry place. **No chlorine grains must be left on the ground!**
f) Remove the roller carrier from the acid pump in order to relieve the dosing hose.
g) If there is a risk of frost, drain all of the water-conveying parts.
h) Keep the GRANUDOS activated to prevent potential condensation in the control housing. (In case of very moist and cold rooms)



ATTENTION!

During recommissioning, it is essential that you follow the instructions in the "Commissioning" chapter and implement the points contained in the commissioning protocol.

8.3 Decommissioning the GRANUDOS PLUS feed system / buffer tank

While the GRANUDOS is running, the feed pump must be in operation and the control valves on the dosing line must be open. This allows the system to be flushed and cleaned.

Procedure:

a) Start the system with the  button and switch off the dosing with 

.
b) Manually open the control valves.
c) The system will now be flushed with water and residual chemicals will be washed out.

Suck the sediment deposits from the buffer tank, if necessary.
Any tightly adhering deposits can be removed with **heavily diluted hydrochloric acid**, if necessary.



ATTENTION CORROSIVE!

Hydrochloric acid is corrosive, wear protective equipment!

8.4 Disposal of used parts and operating materials



Thoroughly clean any removed, contaminated parts and dispose of or recycle them in accordance with the regulations applicable at the operating location. Pay attention to the relevant instructions on the packaging for the operating materials. In case of doubt, information may be obtained from the authorities responsible for disposal at your location.
If this is not possible, dispose of the parts/substances as hazardous waste.

9 Documents

9.1 Declaration of conformity

WDT Werner Dosiertechnik GmbH & Co. KG
Hettlinger Straße 17 | D-86637 Wertingen
Tel. 0049 8272 98697-0 | Fax 0049 8272 98697-19
info@werner-dosiertechnik.de | www.werner-dosiertechnik.de

Werner Dosiertechnik

EG-Konformitätserklärung
EC declaration of conformity
Déclaration de conformité UE

im Sinne der EG-Maschinenrichtlinie 2006/42/EG, Anhang II 1.A
as defined in the ECMachinery Directive 2006/42 / EC, Annex II, Part 1A
selon la directive européenne machines 2006/42 / CE, annexe II 1.A

Hersteller WDT - Werner Dosiertechnik GmbH & Co. KG
Manufacturer Hettlinger Str. 17
Fabricant 86637 Wertingen-Geratshofen

Beschreibung und Identifikation des Produktes:
Description and identification of the product:
Description et identification du produit :

Typenbezeichnung:	Art:
• GRANUDOS 10, GRANUDOS 10-CPR Touch, GRANUDOS 10-Touch, GRANUDOS 10-S5 • GRANUDOS 15, GRANUDOS 15-PC, GRANUDOS 15-S5 • GRANUDOS 45/100-PB, GRANUDOS 45/100-S4, GRANUDOS 45/100 Plus-V70 Touch, GRANUDOS 45/100-CPR Touch, GRANUDOS 45/100-Touch, GRANUDOS 45/100-S5, GRANUDOS 45/100 Plus-V80 Touch • GRANUDOS FB • GRANUDOS Flex, GRANUDOS Flex-CPR Touch, GRANUDOS Flex-Touch, GRANUDOS Flex-S5 • GRANUDOS-VARIO-PB, GRANUDOS-VARIO-CPR Touch, GRANUDOS-VARIO-Touch, GRANUDOS-VARIO-S5, GRANUDOS-VARIO Plus-V80 Touch	Maschine

Funktion: Das Dosiersystem dient zur Desinfektion von Schwimmbadwasser mit Calciumhypochloridgranulat.
Function: The dosing system is intended for swimming pool disinfection using calcium hypochlorite granules
Fonction: Le système de dosage est utilisé pour la désinfection des piscines avec des granulés d'hypochlorite de calcium

Es wird ausdrücklich erklärt, dass das Produkt allen einschlägigen Bestimmungen der folgenden EG-Richtlinien entspricht:
It is expressly stated that the product complies with all relevant provisions of the following EC directives
Il est explicitement dit que le produit est conforme à toutes les dispositions pertinentes des directives CE suivantes :

2006/42/EG RICHTLINIE 2006/42/EG DES EUROPÄISCHEN PARLAMENTS UND DES RATES vom 17. Mai 2006 über Maschinen und zur Änderung der Richtlinie 95/16/EG (Neufassung)

Die folgenden harmonisierten Normen nach Artikel 7 (2) wurden angewandt:
The following harmonized standards as defined in Article 7 (2) were applied:
Les normes harmonisées suivantes selon l'article 7 (2) ont été appliquées :

EN ISO 12100:2010 Sicherheit von Maschinen - Allgemeine Gestaltungsleitsätze - Risikobeurteilung und Risikominderung
EN 60204-1:2018 Sicherheit von Maschinen – Elektrische Ausrüstung von Maschinen – Teil 1: Allgemeine Anforderungen
EN ISO 14120:2015 Anforderungen an Gestaltung und Bau von feststehenden und beweglich trennenden Schutzeinrichtungen

Die in der Gemeinschaft ansässige Person, die für die Zusammenstellung der technischen Unterlagen bevollmächtigt ist:
The designated person who is authorized to draw up the technical documentation:
La personne établie dans la communauté qui est autorisée à constituer le dossier technique:

Name: Werner Dosiertechnik GmbH & Co KG
Straße/Nr.: Hettlinger Straße 17
PLZ Stadt: 86637 Wertingen

WERNER Dosiertechnik GmbH & Co.KG 86637 Wertingen-Geratshofen Tel. 0 82 72 9 86 97-0 · Fax 9 86 97-19

Wertingen, 24.09.2025
Ort/Citiy/Place, Datum/Date

Unterschrift/signature Jochen Rieger, Director

CE SW 001-03 Konformitatserklärung GRANUDOS.docx

9.2 Wiring diagrams

DANGER!

Risk of death due to high voltage. All electrical work on the device must only be carried out by trained specialists in accordance with the applicable safety regulations! Fuses on the control boards must only be renewed once the power has been disconnected and secured against being reactivated!

Tip!

These operating instruction contain the wiring diagrams for the devices' standard design. The special wiring diagrams attuned to the optimal furnishing of the dosing device and the GRANUDOS PLUS feed system are located in the devices' terminal boxes.

Dissolving unit:

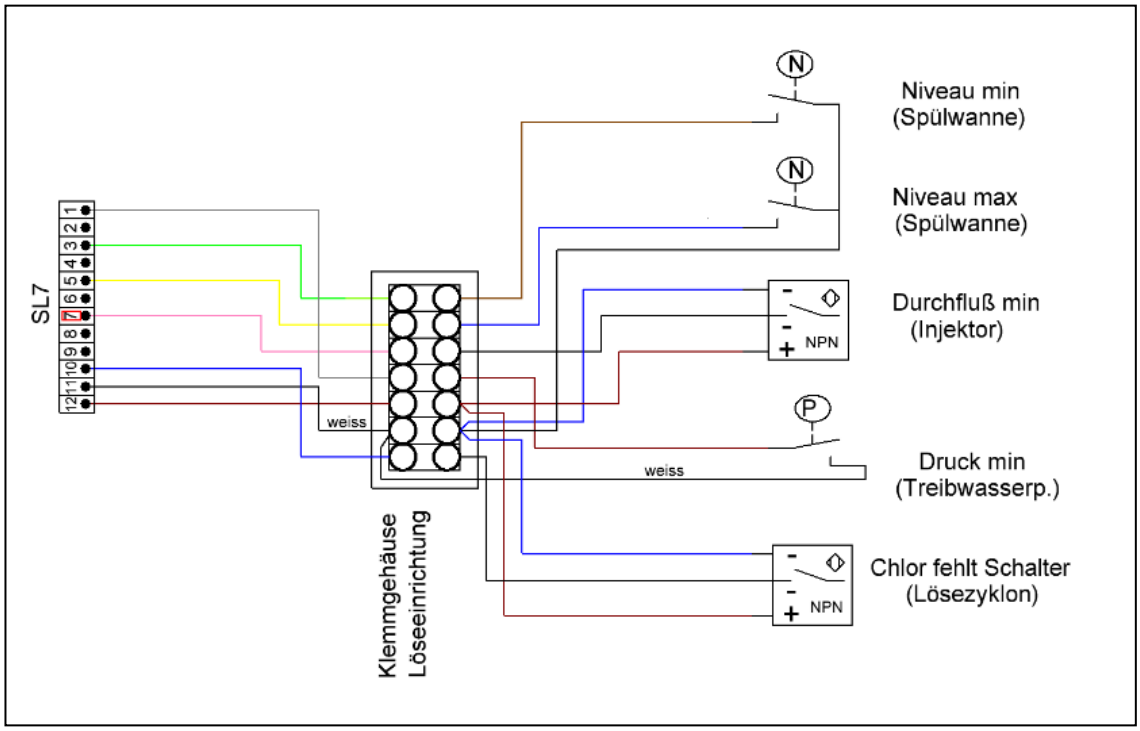

Dosing hopper:

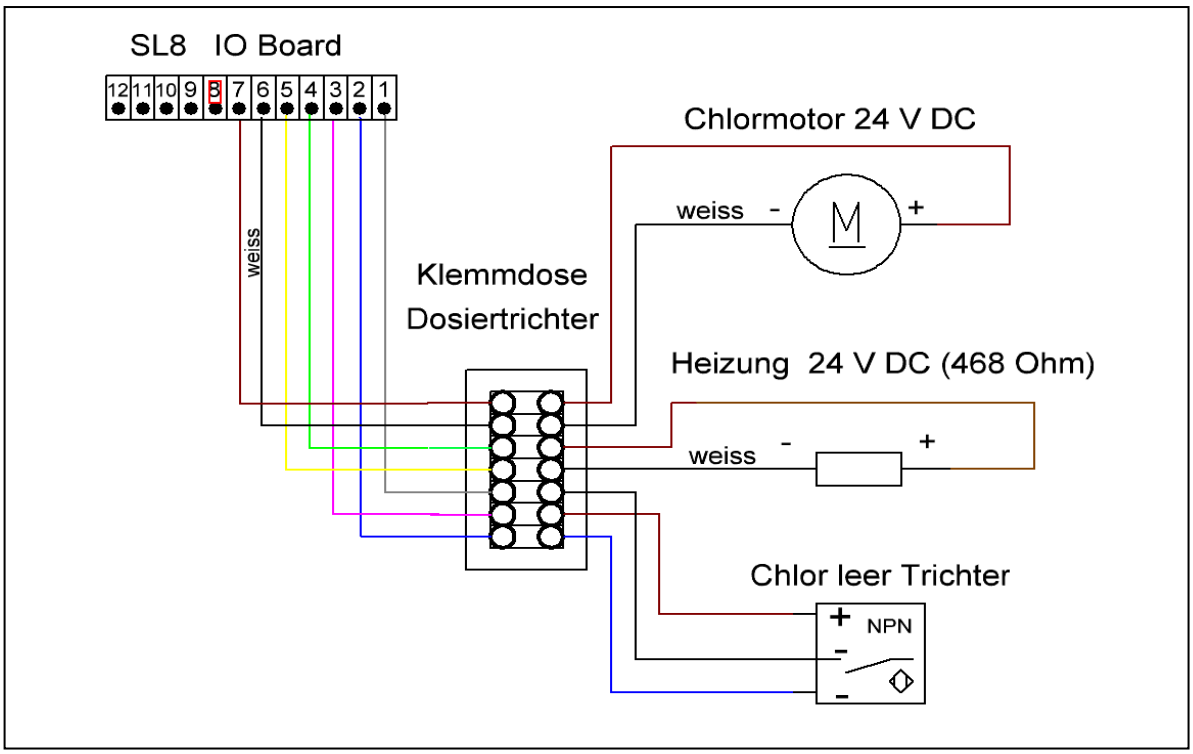

Acid pump:

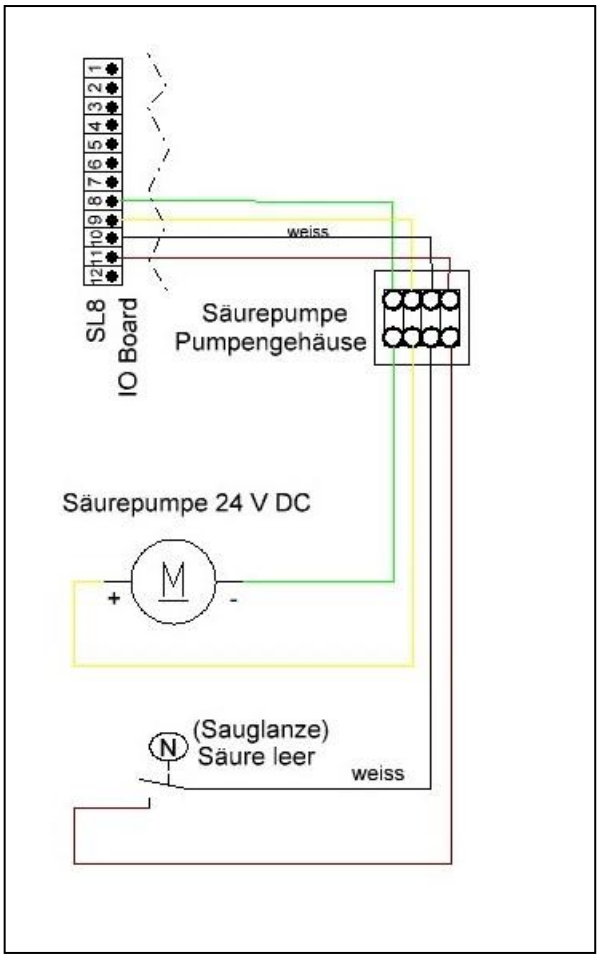

9.2.1 Wiring diagram for power pack with connection to the I/O circuit board

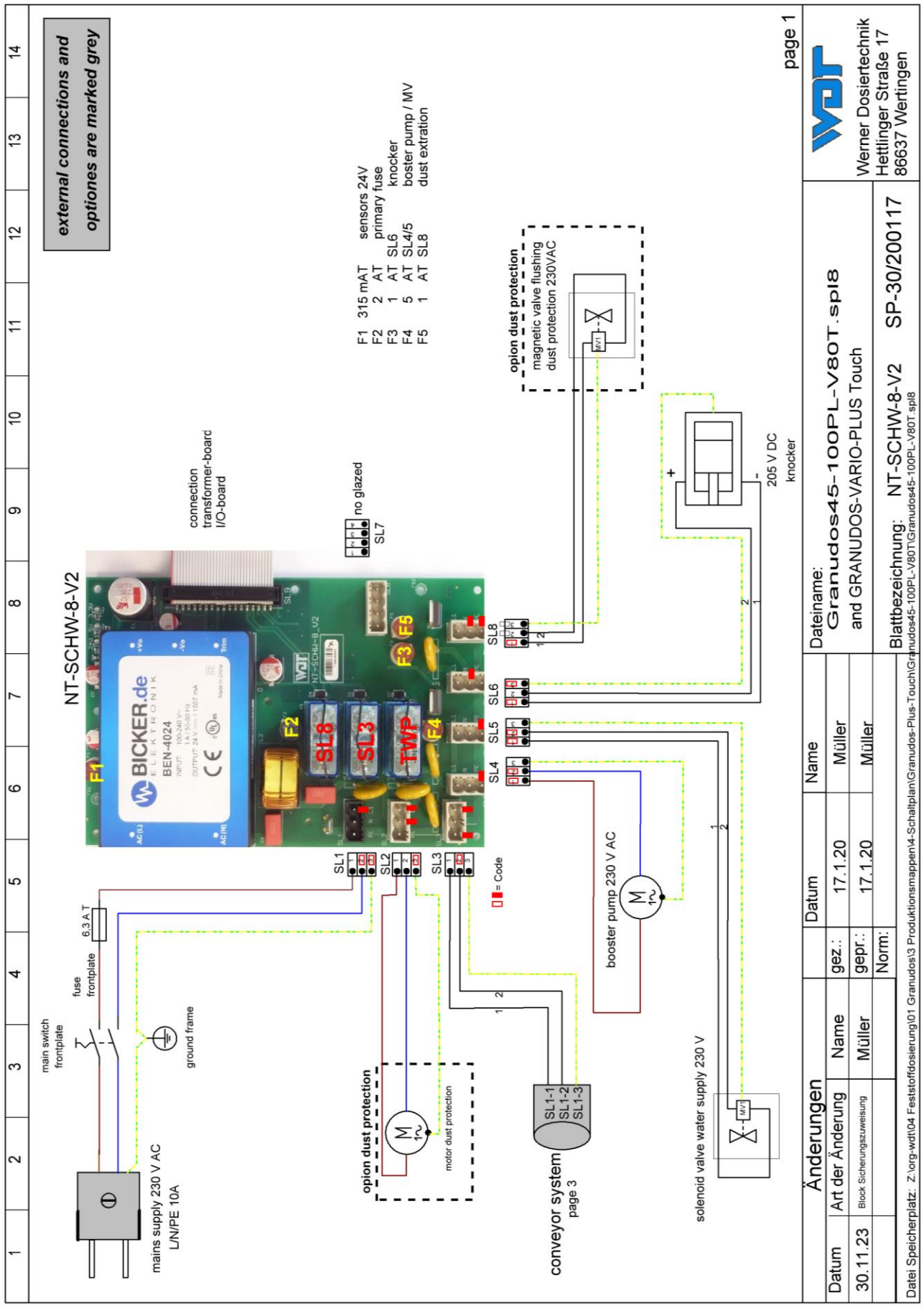

9.2.2 Wiring diagram for GRANUDOS VARIO I/O circuit board

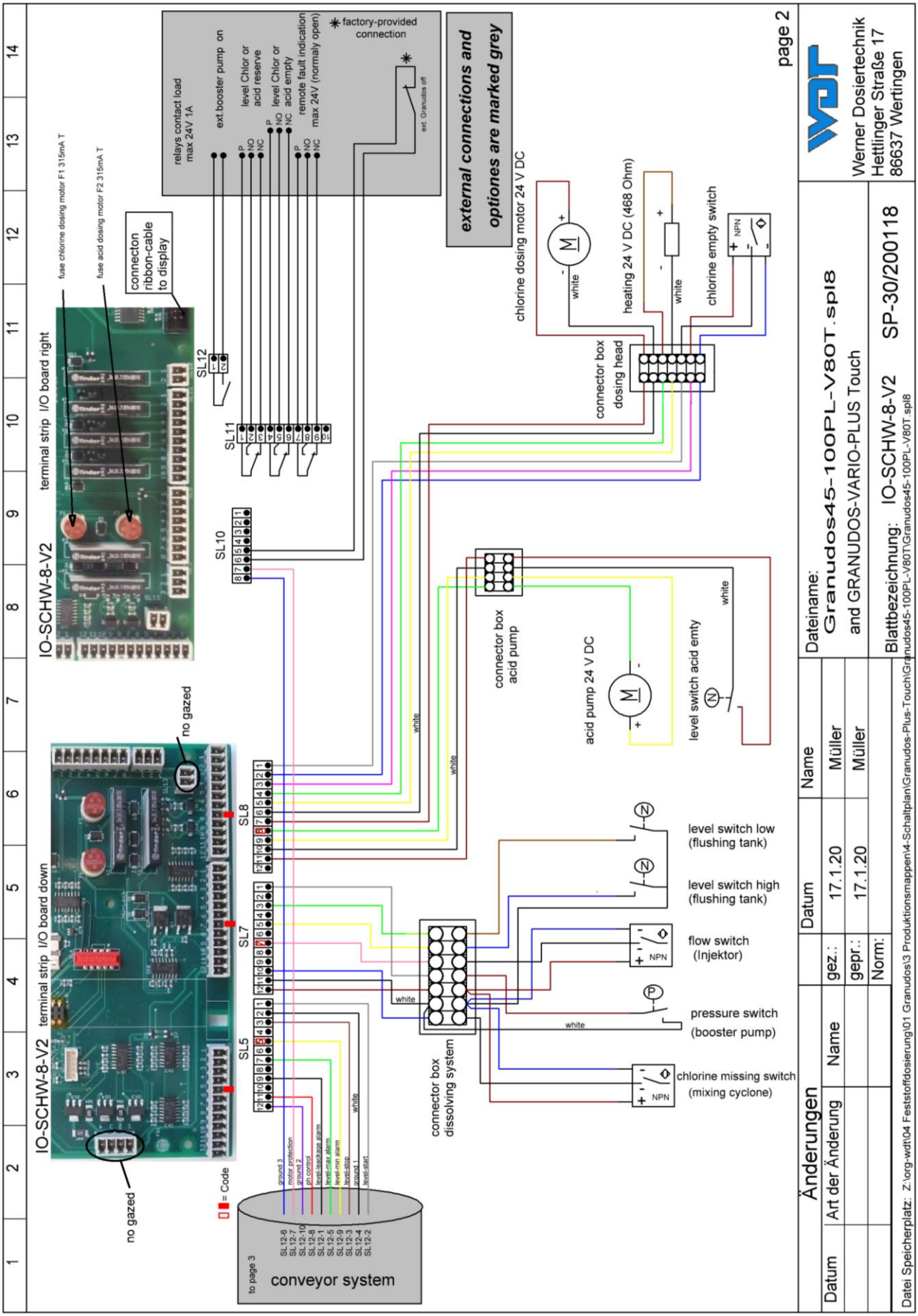

9.2.3 Wiring diagram for I/O circuit board SCHW 8 – on-site buffer tank

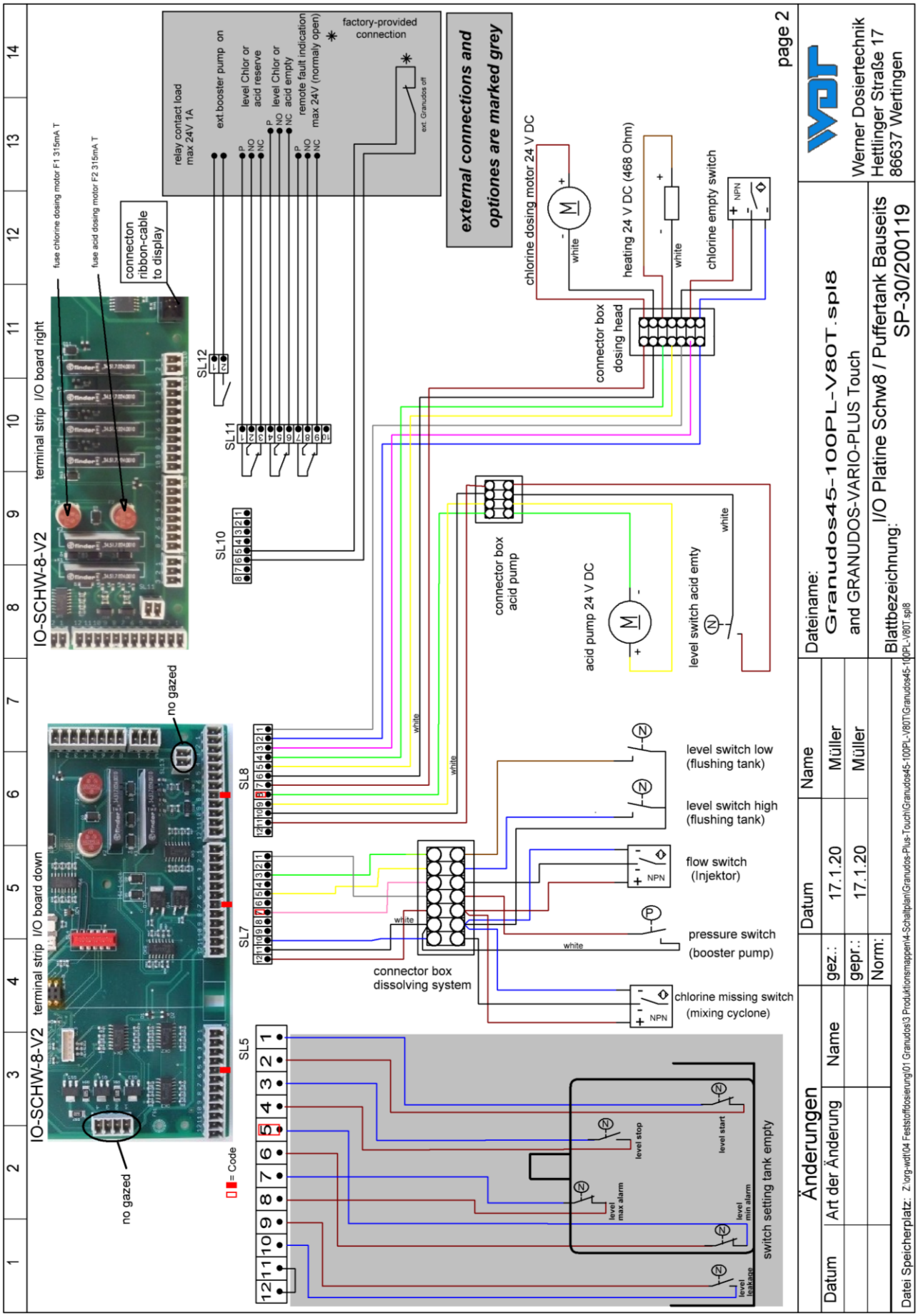

9.2.4 Wiring diagram for pH monitoring

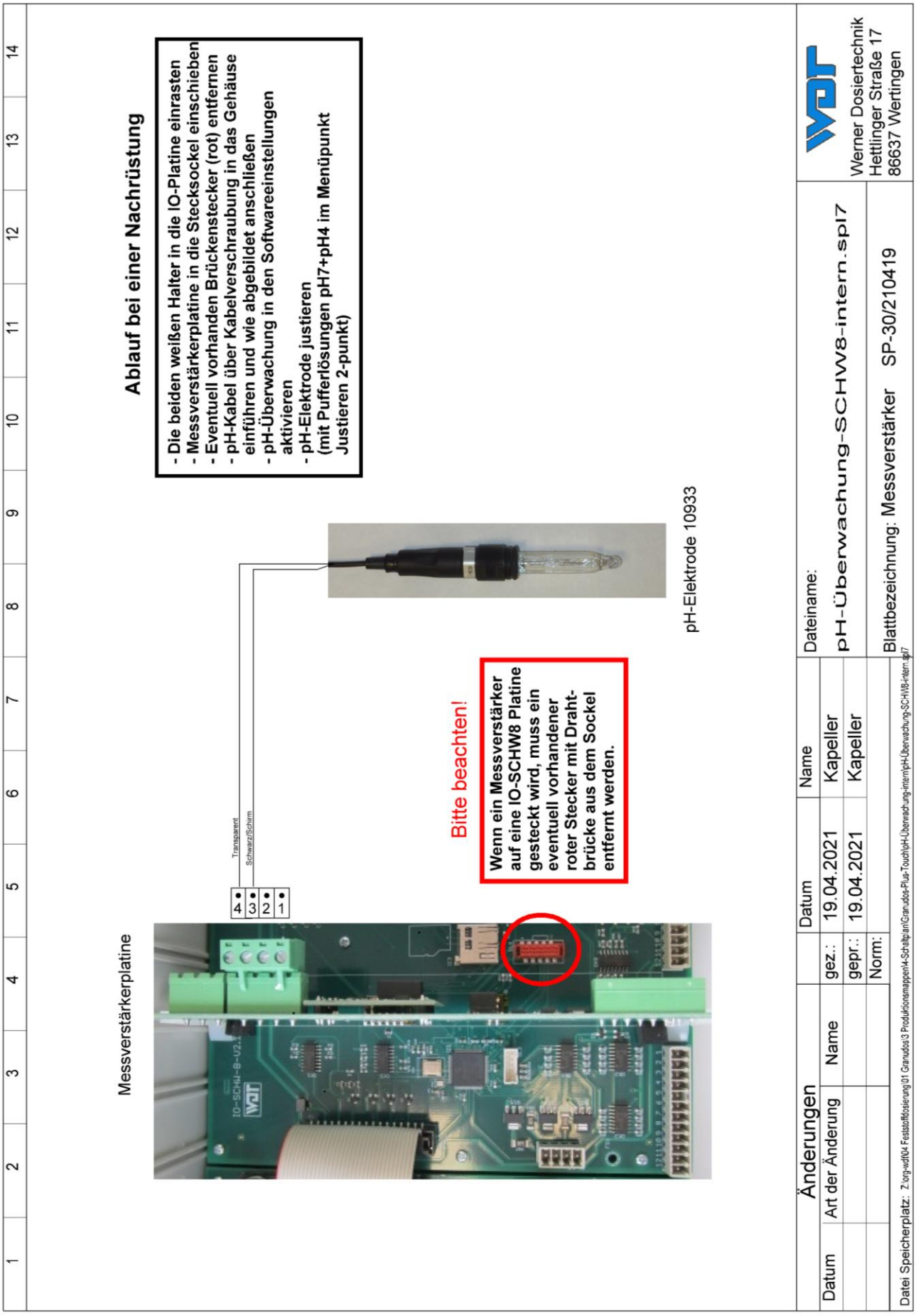

9.2.5 Wiring diagram for feed system 230 V FU (Pump MPN130 FU)

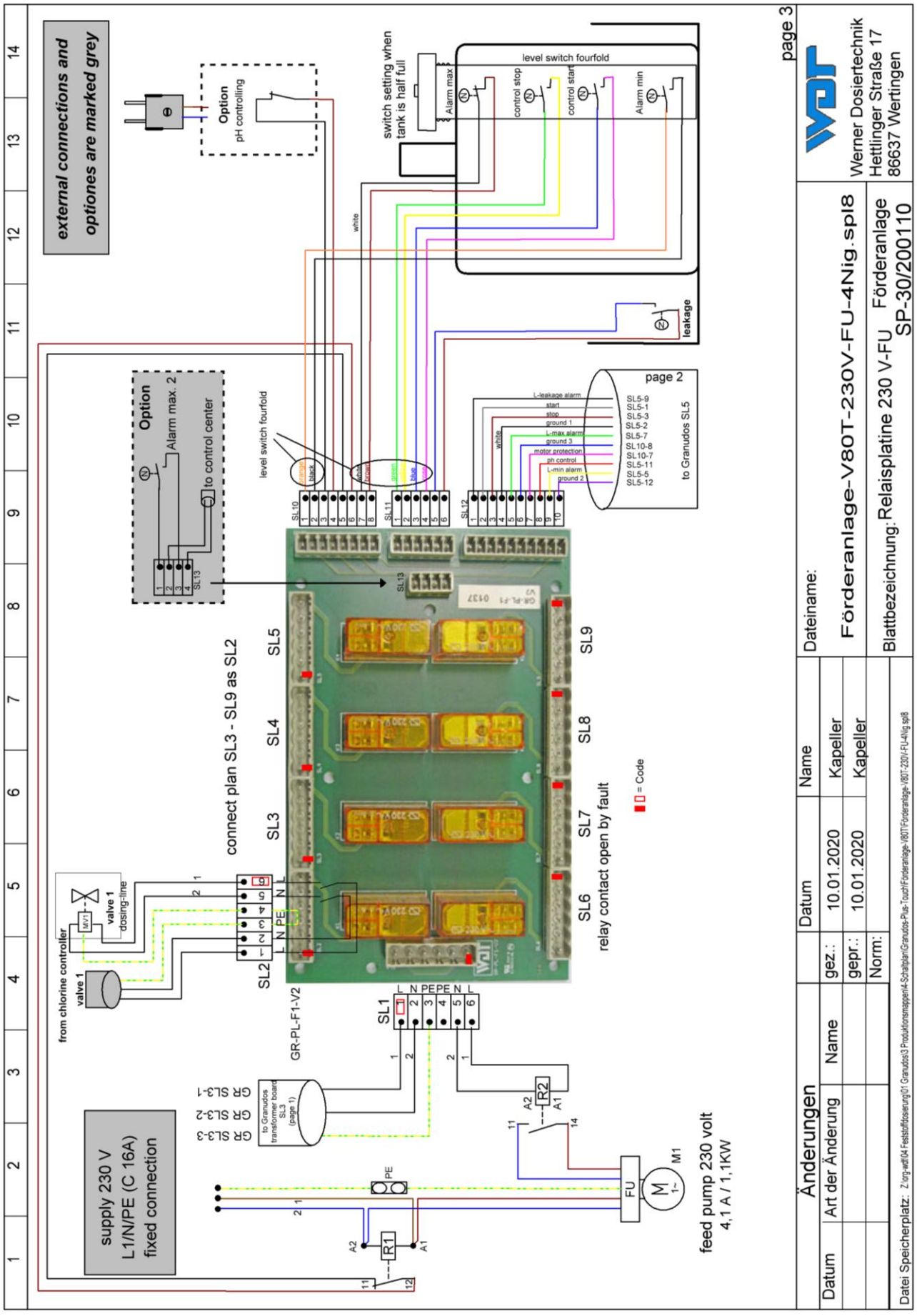

9.3 Commissioning protocol

The commissioning protocol is included with the attached documents.

9.4 Operation data sheet



During a *programme exchange*, all parameters are reset to the factory settings. After a programme exchange, all parameters must therefore be checked and readjusted. We therefore recommend that you enter the optimised, pool-specific parameters in this list.

Settings menu	Factory settings	Setting ranges	Step	during commissioning	Optimised during operation
				Date:	Date:
1 Dosing performance					
Acid	75%	10 – 100%	1		
Calcium hypochlorite	75%	50 – 100%	1		
Cycle time	30 seconds	—		—	—
Pressure switch *(41)*	1.5 barg	1 – 3 barg	0.25		
2 Reserve indication chlorine					
Reserve indication	after task	1-150 kg	1		
Drum size	after task	10-150 kg	1		
Reserve indication	On	Off - On			
3 Reserve indication acid					
Reserve indication after	20 l	1-500 l	1		
Canister size	25 l	1-500 l	1		
Reserve indication	On	Off - On			
4 System					
Date / time	CET / CEST	CET -12 +11			
Display brightness	80%	9 - 100%	1		
System variant	after task	with / without feed system			
5 System → Password					
End user	—	0000 – 9999	1		
Technician 1	01234	00000 – 99999	1		
6 System → Display					
Screensaver	20%	12-100%	2		
Screensaver delay	00: 05	00: 00 – 23: 59 h			
Backlight	75%	24 - 100%	2		
7 System network (if available)					
IP address	—	xxx.xxx.xx.x			
Subnetmask	—	xxx.xxx.xxx.x			
Gateway	—	xxx.xxx.xx.x			
8 Dosing performance determination					
1. Dosing sample		Weight:			
2. Dosing sample		Weight:			
3. Dosing sample		Weight:			
9 Dust extraction					
Flushing interval	12 h	0 – 48 h	1		
Flushing time	5 seconds	0 - 5 seconds	1		
Dust extraction	after task	Off – On			

10 Buffer tank/feed system (option)					
Dosing performance line 1	—	Adjustment at the valve			
Dosing performance line 2	—	5-1000 l/h			
Dosing performance line 3	—	5-1000 l/h			
Dosing performance line 4	—	5-1000 l/h			
Dosing performance line 5	—	5-1000 l/h			
Dosing performance line 6	—	5-1000 l/h			
Dosing performance line 7	—	5-1000 l/h			
Setting of the pressure retention valve	1.2 barg				
11 pH monitoring (option)					
ON/OFF	after task	Off – On			
Target value	6.8 – 7.2 pH				
Alarm low	6.5 pH				
Alarm high	7.5 pH				
Time delay	5 minutes				
Measurement internal / external	after task	Internal / external			
12 Delay booster pump					
Delay time	20	0 - 120 seconds	5		
13 Dosing performance Chlorine granulate					
Rotation speed dosing screw	after task	12 – 60 rpm	1		
Diameter dosing screw	after task	19 / 26 mm	1		
14 Dosing performance acid					
Hose diameter	4.8 mm	0.8/1.6/3.2/4.8/ext			
15 Maintenance interval					
Maintenance after	365 days	0 – 365 days			

Operation data sheet, –master copy–

Settings menu	Factory settings	Setting ranges	Step	during commissioning	Optimised during operation
				Date:	Date:
1 Dosing performance					
Acid	75%	10 – 100%	1		
Calcium hypochlorite	75%	50 – 100%	1		
Cycle time	30 seconds	––		––	––
Pressure switch *(41)*	1.5 barg	1 – 3 barg	0.25		
2 Reserve indication chlorine					
Reserve indication	after task	1-150 kg	1		
Drum size	after task	10-150 kg	1		
Reserve indication	On	Off - On			
3 Reserve indication acid					
Reserve indication after	20 l	1-500 l	1		
Canister size	25 l	1-500 l	1		
Reserve indication	On	Off - On			
4 System					
Date / time	CET / CEST	CET -12 +11			
Display brightness	80%	9 - 100%	1		
System variant	after task	with / without feed system			
5 System → Password					
End user	––	0000 – 9999	1		
Technician 1	01234	00000 – 99999	1		
6 System → Display					
Screensaver	20%	12-100%	2		
Screensaver delay	00: 05	00: 00 – 23: 59 h			
Backlight	75%	24 - 100%	2		
7 System network (if available)					
IP address	––	xxx.xxx.xx.x			
Subnetmask	––	xxx.xxx.xxx.x			
Gateway	––	xxx.xxx.xx.x			
8 Dosing performance determination					
1. Dosing sample		Weight:			
2. Dosing sample		Weight:			
3. Dosing sample		Weight:			
9 Dust extraction					
Flushing interval	12 h	0 – 48 h	1		
Flushing time	5 seconds	0 - 5 seconds	1		
Dust extraction	after task	Off – On			

10 Buffer tank/feed system (option)					
Dosing performance line 1	—	Adjustment at the valve			
Dosing performance line 2	—	5-1000 l/h			
Dosing performance line 3	—	5-1000 l/h			
Dosing performance line 4	—	5-1000 l/h			
Dosing performance line 5	—	5-1000 l/h			
Dosing performance line 6	—	5-1000 l/h			
Dosing performance line 7	—	5-1000 l/h			
Setting of the pressure retention valve	1.2 barg				
11 pH monitoring (option)					
ON/OFF	after task	Off – On			
Target value	6.8 – 7.2 pH				
Alarm low	6.5 pH				
Alarm high	7.5 pH				
Time delay	5 minutes				
Measurement internal / external	after task	Internal / external			
12 Delay booster pump					
Delay time	20	0 - 120 seconds	5		
13 Dosing performance Chlorine granulate					
Rotation speed dosing screw	after task	12 – 60 rpm	1		
Diameter dosing screw	after task	19 / 26 mm	1		
14 Dosing performance acid					
Hose diameter	4.8 mm	0.8/1.6/3.2/4.8/ext			
15 Maintenance interval					
Maintenance after	365 days	0 – 365 days			

9.5 Maintenance protocol

The maintenance protocol is included with the attached documents.

9.6 Spare parts list

Device part		Designation	Code no.
GRANUDOS PLUS		M-kit GR10-100 cpl from 09/2004	27604
Chlorine dosing		Dosing hopper GR PLUS HTH 40 kg (for other chlorine drums upon request)	16775
		Cover for dosing hopper GRANUDOS VARIO	12866
		Dosing motor PLG 30-35	11676
		Dosing motor PLG 30-60	11546
		Motor bracket PLG-d32	11542
		Dosing screw d6/D26	11550
		Dosing pipe, heated GR	11556
		Knocker complete GRANUDOS VARIO	11558
Acid dosing		Acid pump Sa complete	11628
		Pump casing Sa	14140
		Roller carrier Sa	12609
		Hose kit Sa 4.8x1.6 Sa	13414
		GRANUDOS suction set	12523-1
		Acid dosing valve GR	15099
		Spare part set for acid dosing valve	15764
Dirt filter		Filter housing d75 GR complete with flushing	30176
		Filter top Ø 75 mm GR/PAK, FIP	27806
		O-ring for dirt filter d75	11258
		Filter insert d75 GR/PAK VA complete	11640
		Filter vent 1/4" with ball valve and hose connection 6x1	20861
Control unit		Control board IO_GRD_V80	26940
		Control board NT_GRD_V80, power pack	27520
		Operating touch screen 7”	27080
		Main switch	21839
		Fuse holder FPG1 5x20 IP67	21899
		Fuse set	26844
Floating valve		Floating valve d25 GR PLUS complete	15405
		Diaphragm / O-ring for floating valve	16367
		Float	11621
Flushing tub		Level switch GR/PAK	10496
Booster pump GR		Booster pump Lo 1HM04-A	24618-1
		Mechanical seal Lo-A	12800-1
Flow switch		Suction pipe GR ½“ S14 GR PLUS	25659
		Flow switch GR/PAK - 18x1	25671
		Connecting hose Viton - 10/2.5/180	11565-1
Injector		Injector ½” GR/PAK complete	24997
		Hole washers, set	11594
Dissolving cyclone		Dissolving cyclone GR VARIO PLUS	11613
		No chlorine switch	11609
Feed system		Activated carbon 1 kg for filter on GPL tank	12546
		Level switch in tank 1 ½“ PVC/PVDF GPL	23846-1
		Feed pump MPN 130 - 1 bar	11241
		Feed pump MPN 150 - 1.5 bar	11242
		Feed pump MPN 130 PVDF FU - 1.6 bar	21983
		Non-return valve d25	11013
		Diaphragm seal d25-1/4”	10042
		Manometer 1/4 bar ¼“ glycerine	21937
		Pressure retention valve DHV DN 20	10071
		Maintenance kit pressure retention valve DHV DN20	25494
		Control valve ½” Bü	20294
		Maintenance kit control valve (20294)	21416-1
		Angle seat valve PVC d20 FPM	11408-1
pH monitoring		pH electrode 55 mm gel	10933
		Cable for pH electrode GR PLUS	11680
Dust extraction		Solenoid valve	14040
		Dust extraction pump	17581
		Disconnect lever for solenoid valve	11829
		Maintenance kit for dust extraction	27954

10 Appendices

- Commissioning Protocol WDT
- Maintenance Protocol WDT
- Operating instructions for setting up the external pH monitoring

Personal notes

Commissioning Protocol IP-067-EN
GRANUDOS VARIO-PLUS V80 Touch

Werner Dosiertechnik

This protocol is to be completed by the commissioning technician! Without a completed and signed commissioning protocol, all warranty claims become void!

Object: ..... Date: __.__.____

City, street, house number: .....

Device type: ..... Year of manufacture: ..... Serial number: .....

	Activity	Completed	Comment
1	**Preparatory Tasks**		
1.1	Install the roller support for the peristaltic pump, see OI Chapter 5.2	☐	
1.2	Connect the acid canister and attach the chlorine drum	☐	
1.3	Vent the booster pump	☐	
1.4	Fill the buffer tank	☐	
2	**Dissolving Unit (observe a 6 second delay with the switches!)**		
2.1	Check the pressure switch: Close the inlet ball valve, GRANUDOS stops, fault display	☐	
2.2	Adjust the water flow in the dissolving unit		
2.3	Adjust the water level - adjust the washer to the pressure conditions	☐	
2.4	Adjust the pressure switch (41): see OI under Chapter 5.2.8	☐	
2.5	Vent the dust extraction pump (61) (optional), output test for flushing and dust extraction drive	☐	
2.6	Vent the feed pump for the buffer tank		
2.7	Check the flow switch: Close the outflow ball valve (53), dosing stops, fault display	☐	
2.8	Check the level switch: Switch body up – dosing stops, fault display	☐	
2.9	Check the level switch of the flushing tank (47): Switch body down – GR stops, fault display	☐	
2.10	Check the function of the float valve (42) - flow reacts gently	☐	
3	**Dosing Technology for Chlorine**		
3.1	Heating function (26): Dosing pipe warm	☐	
3.2	Function of the chlorine empty switch (22): Turn drum - fault display	☐	
3.3	Function of the dosing motor (29): Programme for chlorine dosing output test - chlorine is dosed	☐	
3.4	Check the tension bands and safety belt	☐	
3.5	Instructions for drum exchange, see operating instructions under Chapter 5.2.3	☐	
4	**Dosing Technology for pH Reducer**		
4.1	Function of the empty switch: Suction lance pulled from the canister - fault display	☐	
4.2	Function of the dosing pump: Programme for acid output test - pump suctions	☐	
5	**Controller - after opening the controller**		
5.1	All connector plugs: securely engaged	☐	

Commissioning Protocol IP-067-EN
GRANUDOS VARIO-PLUS V80 Touch

6	**Conveyor System**		
6.1	Check the feed pump: Pressure, leakage, noise, output test for feed pump (minimum pressure 1.0 bar)	☐	
6.2	Filling - Function of the 4 level switches in the tank and 1 level switch in the collecting basin	☐	
6.3	Check the control valves	☐	
6.4	Check the backflow prevention in the dosing lines	☐	
6.5	Check the backflow prevention of the filling	☐	
6.6	Check the pressure control valve	☐	
7	**Other**		
7.1	Note down the inlet pressure and outlet pressure on the GRANUDOS	☐	Inlet pressure:___ barg; Outlet pressure:___ barg
7.2	Clean the GRANUDOS system	☐	
7.3	Discuss and hand over operating instructions	☐	

Additional remarks:

Commissioning and instruction carried out by: _____

Instructed persons: _____

Signature of commissioner: _____

Operator's counter-signature: _____

Maintenance Protocol WP-073-EN
GRANUDOS VARIO-PLUS V80 Touch

Werner Dosiertechnik

This protocol to be completed by the maintenance technician! Without a completed and signed maintenance protocol, we reserve the right to assert a warranty regulation.

Object: _____ Maintenance year: 20___

City, street, house number: _____

Device type: _____ Year of manufacture: _____ Serial number: _____

	Activity	Maintenance interval in months	Month 1	Month 2	Month 3	Month 4	Month 5	Month 6	Month 7	Month 8	Month 9	Month 10	Month 11	Month 12	Comment / additional tasks
1	**Granudos Plus Dissolving Unit**														
1.1	Check the level switch min + max	6						☐						☐	
1.2	Check the pressure switch, adjust, if necessary	6						☐						☐	
1.3	Check the flow switch	6						☐						☐	
1.4	Renew the floating valve membrane and the conical seal	12												☐	
1.5	Check the function of the float valve	6						☐						☐	
1.6	Renew the hose to the suction pipe	12												☐	
1.7	Check the pump impeller and lid (only for Calpeda brand pumps)	12												☐	
1.8	Check capacitor of the booster pump; replace capacitor if electrical capacity <7µF	12												☐	
1.9	Mechanical seal on b-pump - check for leaks	6						☐						☐	
1.10	Check the pump ball bearings - noise	6						☐						☐	
1.11	Clean the dirt filter	3			☐			☐			☐			☐	
1.12	Replace all O-rings	12												☐	
1.13	Nozzle diameter diffuser < 6.5 mm - check; (check passage with 6.5 mm drill)	12												☐	
2	**Dosing Device for Chlorine**														
2.1	Heating function: Dosing pipe warm	6						☐						☐	
2.2	Check the chlorine empty switch	6						☐						☐	
2.3	Check the dosing screw, clean	6						☐						☐	
2.4	Dosing motor: Replace the gaskets	12												☐	
3	**Dosing Device for Acid**														
3.1	Check the peristaltic pump for function and for humidity and corrosion	1	☐	☐	☐	☐	☐	☐	☐	☐	☐	☐	☐	☐	
3.2	Empty switch function	6						☐						☐	
3.3	Renew dosing hose: Material Pharmed (standard) Material Viton (for hydrochloric acid 10 - 33%)	 12 6						 ☐						 ☐ ☐	
3.4	Renew gaskets of the acid dosing valve	12												☐	
4	**Dust extraction (optional)**														
4.1	Completely check and clean the flushing ring of the suspensor, including the injector and flushing pipe	2		☐		☐		☐		☐		☐		☐	
4.2	Check the drill holes of the outlet connection for contamination and clean them	2		☐		☐		☐		☐		☐		☐	
4.3	Check / exchange the disconnect lever of the solenoid valve	12												☐	

Key: F= with each drum exchange; 1 = monthly, 3 = every 3 months, 6 = every 6 months, etc.; ☒ = work completed

Maintenance Protocol WP-073-EN
GRANUDOS VARIO-PLUS V80 Touch

Werner Dosiertechnik

	Activity	Maintenance interval in months	Month 1	Month 2	Month 3	Month 4	Month 5	Month 6	Month 7	Month 8	Month 9	Month 10	Month 11	Month 12	Comment / additional tasks
5	**Feed system with buffer tank (optional)**														
5.1	Check function of the level switch, 4x buffer tank + 1x collecting tub	6						☐						☐	
5.2	Check the function of the non-return valves and pressure retention valves	6						☐						☐	
5.3	Clean the pressure retention valve	12												☐	
5.4	Check the function of the manometer	6						☐						☐	
5.5	Flush the system with water and diluted acid (clean)	12												☐	
5.6	Check the electric control valves	12												☐	
5.7	Renew the separating membranes of the control valves (maintenance set)	12												☐	
5.8	Renew the membranes of the non-return valves	12												☐	
5.9	Renew the active carbon in the filter	12												☐	
5.10	Check the pH electrode (and calibrate it)	3			☐			☐			☐			☐	
5.11	Check the PTFE mechanical seals on the feed pump	12												☐	
5.12	Check the feed pump's ball bearings	12												☐	
5.13	Renew the PTFE mechanical seals on the feed pump	24												☐	
5.14	Renew the feed pump's ball bearings	24												☐	
5.15	Renew the membranes of the pressure-retention valves	24												☐	
6	**Other Tasks**														
6.1	Thoroughly clean the GRANUDOS system	1	☐	☐	☐	☐	☐	☐	☐	☐	☐	☐	☐	☐	
6.2	Check dosing lines for firmness and wall thickness, renew, if necessary	12												☐	
7	**Maintenance Tasks with each Drum Exchange!**														
7.1	Clean the dissolving pipe in case of contamination	F	☐	☐	☐	☐	☐	☐	☐	☐	☐	☐	☐	☐	
7.2	Remove encrustations from the dosing hopper	F	☐	☐	☐	☐	☐	☐	☐	☐	☐	☐	☐	☐	
7.3	Test chlorine and acid dosing	F	☐	☐	☐	☐	☐	☐	☐	☐	☐	☐	☐	☐	
7.4	Check for pump noise	F	☐	☐	☐	☐	☐	☐	☐	☐	☐	☐	☐	☐	
7.5	Check the system for leaks.	F	☐	☐	☐	☐	☐	☐	☐	☐	☐	☐	☐	☐	
7.6	Check the hoses of the dust extraction (optional) and clean, if necessary	F	☐	☐	☐	☐	☐	☐	☐	☐	☐	☐	☐	☐	

The stated interval times are manufacturer's suggestions and must be adjusted to the operating conditions, if necessary.

Additional remarks:

Maintenance performed and device functioning checked: _____ Date: _____
Signature

Operator's counter-signature: _____
Signature

pH-monitoring settings

Press 2x until “CONFIG” is displayed

Confirm 1x

Select CONFIG 2

Confirm 1x

Select CHANNEL 3

Confirm 2x

Select CHANNEL “ON”

Confirm 1x

Press 1x (LIMIT is displayed)

Confirm 1x

Select ALARM

Confirm 1x

Press 1x (8.00 is displayed)

Confirm 2x

Set value to 7.5 (upper limit)

Confirm 1x

Press 1x (OFF is displayed)

Confirm 1x (OFF is blinking)

Confirm 1x (0.00 is blinking)

Confirm 1x

Set value to 6.5 (lower limit)

Confirm 1x

Press 1x (T.V. 0.0M is displayed)



Upper limit: pH 7,5

Lower limit: pH 6,5

Time delay: 5.0min

Confirm 1x

Set value 5.0M (time delay of 5 minutes until the alarm is initiated)

Confirm 1x

Press 1x (SIG. OFF is displayed)

Confirm 1x (OFF is blinking)

Press 1x (ON is blinking)

Confirm 1x

Pressing this key combination at the same time and twice in a row leads back to the main menu (HOME is shown)

Signal tone is sounded - can be acknowledged by pressing the Acknowledge button.

Thereafter, the current value is shown.

After "PT missing" fault indication:

Press 2x until “CONFIG”is displayed

Confirm 1x

Select CONFIG 3

Confirm 1x

Press 2x - TKM AUTO is displayed

Confirm 1x

Press 1x (25°C is displayed)

Confirm 2x

Press 1x - TK.C. 25°C is displayed When "AUTO" is shown, change as for TKM.

Pressing this key combination at the same time and twice in a row leads back to the main menu (HOME is shown)